Modelling of
A Clean Energy Hub with Hydrogen as Energy Vector
Using Nanticoke Region as a Case Study

by

Yaser Ahmed Maniyali

A thesis
presented to the University of Waterloo
in fulfilment of the
thesis requirement for the degree of
Master of Applied Science
in
Chemical Engineering

Waterloo, Ontario, Canada, 2009

Author's Declaration

I hereby declare that I am the sole author of this thesis.

This is a true copy of the thesis including any final revisions, as accepted by my examiners. I understand that my thesis may be made electronically available to the public.

Yaser Ahmed Maniyali

Abstract

An ‘energy hub’ is composed of an interaction of energy loads and energy sources that will include different technologies for power generation, energy storage, and energy conversion. These technologies could include transformers, wind turbines, electrolyzers, solar panels, and fuel cells. Hydrogen is an ideal energy vector for use in energy hubs where energy can be produced from multiple energy resources like nuclear and renewable energy sources. It is easily stored and distributed, and it can be used for multiple end-uses such as electrical load levelling or in transportation applications. Nuclear power provides a greenhouse gas free, reliable and stable supply of electricity to an energy hub in an efficient and economic manner and as a result is the preferred base load source of power.

In this work a model of a clean energy hub comprising of a nuclear plant, wind turbines, solar panels, and biomass reactors was developed using Matlab/Simulink. The model was used to develop a conceptual design of an energy hub with Nanticoke, Ontario, serving as the case study region. The hub was designed to replace existing coal-based power generating facilities and meet electricity demands, as well as current and future hydrogen demands for local industry and transportation as projected in 2030. Conceptual equipment sizing and costing for solar panels, nuclear plants, wind turbines, biomass reactors, fuel cells, and electrolyzers are considered. The cost for hydrogen storage was considered while phasing in revenue generated, and environmental pollution avoided by using clean electricity and hydrogen powered vehicles.

It was observed that nuclear reactors, followed by biomass reactors, followed by off-shore wind turbines, followed by on-shore wind turbines, and finally followed by solar panels represent the sequence of technology adoption in order to maximize environmental and economic benefits, as this represents the cost and energy effectiveness hierarchy for electricity generation as observed while analyzing hub costs for meeting electricity demand. It can also be concluded that the hub for electricity generation is most economical if the nuclear reactor capacity installed is very close to the average yearly electricity demand required by the grid, and the nuclear reactor is operated at full capacity throughout the year while augmented with other renewable technologies. During periods of excess power hydrogen is produced and stored onsite, and hydrogen fuel cells are subsequently used to meet peak electricity demand.

Underground hydrogen storage is the most economical option for all energy hubs analyzed. In some scenarios a small amount of coal generation capacity was maintained to assist with peak power demand through a very limited time of the year.

The analysis concluded that at this time fuel cells are a more costly option for generating electricity even after considering emissions revenue with the cogeneration of hydrogen for industry and transportation, as well as for electricity. It is more economical to convert excess power into hydrogen using electrolyzers and sell it to industrial sectors and transportation sectors in the early years of an energy hub. A number of scenarios were analyzed that comprise of different combinations of technology in various hub designs. In an 'electricity cost effective' scenario the hub was found to meet the electrical demand at a cost of 10.23 cents per KWh, while reducing CO_2 emissions by 11.6 million tonnes per year. In a 'hydrogen economy' scenario 67 million kilograms of hydrogen were sold to the hydrogen economy per year at $4.82 per kg, while the electrical demand of the hub was met a cost of 11.09 cents per KWh, while reducing CO_2 emissions by 13.5 million tonnes per year. In an 'emission reduction' scenario 14.9 million tonnes of CO_2 emissions where reduced, 197 million kg of hydrogen was sold to the hydrogen economy per year at $4.82 per kg, while the electrical demand of the hub was met a cost of 15.64 cents per KWh. Most of the hub design configuration and operational scenarios considered in the analysis become economically viable if electricity prices are approximately $65 per MWh, if gasoline prices average approximately $1.50 per litre over the next 20 years, and if the price of carbon credits or CO_2 per tonne goes up to around $ 35 – 40 per tonne. Therefore, these parameters must be closely monitored to determine energy hub profitability.

Acknowledgements

I would like to first and foremost thank University of Waterloo for providing me with the opportunity to pursue a master's degree in Chemical Engineering.

I would like to thank my supervisors Dr. Michael Fowler, and Dr. Ali Elkamel for their guidance and support during the entire period of my studies.

I would also like to thank Vineel Nagisetty for assisting me with building the model, and finding information for storage and biomass costs.

And lastly, I would like to thank the entire Green Energy Systems group for providing me with a deeper understanding of fuel cell systems, and offering me emotional support whenever I needed it.

Dedication

I would like to dedicate my thesis to my parents, Muzaffer and Parveen, who encouraged me to pursue my master's degree, and have always supported me to reach my potential to the fullest.

Table of Contents

List of Figures

List of Tables

Chapter 1 Introduction

Energy demand in Ontario has been increasing consistently over the past 15 years with increasing gross domestic product. Currently, Ontario has built capacity for producing 31,214 MW of electricity during peak demand, of which 36.5% is provided by nuclear energy, 26% by hydro power and other renewables, 20.6% by coal, and 16.3% by oil and natural gas (Ontario Power Authority, 2007). However, due to growing awareness to reduce dependence on fossil fuels, increase in peak demand to 40,000 MW by 2027, and due to the fact that 80% of the current production will have to be replaced or refurbished over the next 20 years, almost 15,700 MW of future electricity demand will have to be met either by renewable energy, namely wind, solar, biomass, and hydroelectric power, and/or by adding nuclear power. A key issue with renewable energy sources, particularly wind and solar, is their intermittent nature, and that they are distributed over a large area. As a result, electricity supply and demand times are often not synchronized. Furthermore, the current electrical grid system in Ontario does not support implementation of renewable sources of energy. Consequently, back-up power or another form of power storage system is needed to fully take advantage of renewable energy sources (Ohara, 2007). Given the magnitude of the increase in electricity generation required clearly nuclear power will also have play a significant role in addressing Ontario's power generation requirements in a carbon constrained environment. Nuclear power is a key option available for alleviating the risk of global climate change, and its potential contribution to greenhouse gas (GHG) emissions reduction is significant. In a longer-term perspective, non-electrical applications of nuclear energy, such as heat, potable water, and hydrogen production will also be important to GHG emission reduction, clean water markets, and a hydrogen economy. Thus, it is clearly evident that Ontario will require a combination of intermittent renewable and stable GHG free nuclear baseload power generation to meet its longer term electricity requirements while at the same time reducing GHGs.

On-road transportation energy demand for Canada, and subsequently Ontario, is expected to also grow by 1.4% each year, with personal mobility, and commercial road transportation accounting for 45% increase in energy use between 2004 and 2030 (Natural Resources Canada, 2007). Since almost all of our transportation energy requirements are met by fossil fuels today,

this raises a significant health, and environmental concern for damages caused by smog and particulate matter (Anderson, 1996). It is estimated by the Canadian Medical Association (CMA) that smog-related annual healthcare and economic costs in Ontario are currently at $ 570 million rising to $ 740 million per year by 2031 (DSS Management Consultants, 2005). In addition, Ontario consumes approximately 15.7 billion litres of gasoline annually contributing to 3.8 million tonnes of CO_2. This contributes heavily towards global warming and urban air pollution. Hence, there is a pressing need for reducing dependence on fossil fuels for transportation.

The concept of an integrated energy system based on hydrogen, called the 'hydrogen economy', is promising because it would enable the widespread integration of renewable energy sources such as wind and solar power (Naterer, Fowler, Cotton, & Gabriel, 2008). The use of hydrogen would allow the storage of electricity until it is needed to match demand. Previous work has shown the use of hydrogen to enable renewable energy sources could be economically feasible (Taljan, Fowler, Canizares, & Verbic, 2008), especially with regards to the use of hydrogen for vehicles. The conversion of electricity to hydrogen can be achieved today in a clean manner through electrolysis, which produces no operational greenhouse gases or air pollution. While currently over 95% of hydrogen is obtained from natural gas through steam-methane reforming, electrolysis, and future technologies such as Cu-Cl thermochemical cycles (Naterer, 2009) also have potential to compliment steam methane reforming as a means of hydrogen production (Naterer et al., 2008) for large scale production. Hydrogen is also considered for vehicles and other modes of transportation. Vehicle technology is increasingly shifting towards electrification, beginning with mild hybrids, plug-in hybrids, and ultimately becoming hydrogen fuel cell and low-range electric vehicles (Mierlo, 2007).

The Nanticoke coal-fired power generator is the largest in North America and has the ability to provide 3750 MW of energy. However, due to the environmental effects of operating coal-fired plants, the Ontario government has passed a regulation phasing out the use of coal power generation at existing facilities by December 31, 2014. This provides a unique opportunity to utilize the existing transmission lines to create a centralized power-generation hub comprising of renewable, nuclear, and biomass energy with hydrogen as the energy vector. Such a hub

would have several distinct advantages in the Nanticoke region. It will significantly reduce environmental emissions compared to the existing coal plant. It will be able to facilitate the intermittency of renewable resources such as solar, and wind to store energy in the form of hydrogen and convert hydrogen back to electricity when demand returns. It can facilitate the demand for vehicles running on hydrogen, and it will be able to significantly reduce costs per megawatt (MW) of power generated compared to decentralized systems where costs per MW of power generation and distribution are higher (Ackermann, Anderson, & Soder, 2001). Hence, in this work, a clean energy hub consisting of wind, solar, nuclear, and biomass technologies is modelled to meet peak electricity demand of 3750 MW through the existing grid system. Electrolyzers, fuel cells, and hydrogen storage systems are used to facilitate the differences between electricity supply and demand.

Chapter 2 Literature Review

2.1 Background of Electricity in Ontario

There are several reasons behind the government of Ontario's decision to move away from coal as a source of electricity. Coal power plants emit pollutants and GHGs such as carbon dioxide, sulphur oxides, nitrogen oxides, sulphuric and hydrochloric acid, lead, mercury, and other heavy metals. The release of these pollutants is responsible for smog and acid rain in South-western Ontario. Furthermore, other pollutants such as chromium and nickel have been known to cause birth defects and cancer. In fact, due to its size, the Nanticoke power plant was estimated to produce 7460 tonnes of toxic pollutants in 2000, or 6% of the total pollution in Canada (CBC News, 2002).

On the other hand, the main advantage to the use of coal is that electricity generation can be somewhat adjusted according to demand by burning the appropriate amount of coal. This aids power generation companies in meeting occasional spikes in electricity demand. As a result of the closure of the coal power plant in Nanticoke and the rising demand for electricity in Ontario, there will be a need to increase the power generated from other sources. Figure 1 illustrates the projected growth in electricity demand over the next 30 years in Ontario. As observed, most existing nuclear reactors will either have to be refurbished or replaced by the year 2027. Although there are plans by Ontario Ministry of Energy to refurbish and add more nuclear reactors, roughly 15,300 MW of future power generation is expected to come from renewables, of which roughly 6,500 MW of power will be saved by power conservation. Figure 2 illustrates the role of renewable energy sources, and conservation over the next 10 years according to Pembina Institute. As a result, new projects will need to be initiated. OPG has proposed building four new nuclear reactors at their Darlington site with a capacity of 4800 MW. However, despite advancements in nuclear output, Bruce Power and several industry experts believe that the goal of reducing Ontario's peak electricity demand by 2,700 MW is not realistic due to the growing population and growing demand for electricity. As a result, Bruce Power is considering making use of the existing infrastructure at the Nanticoke power plant, and replacing the pollution-causing coal plant with a clean energy hub.

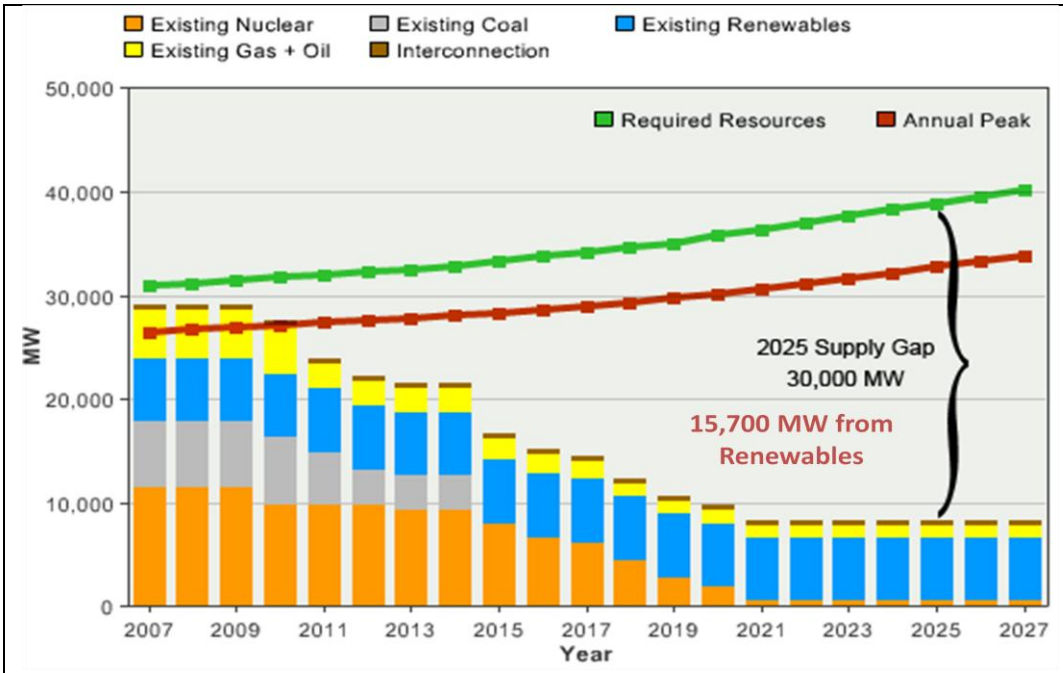

Figure 1: Projected Electricity Demand in Ontario (Nuclear Energy, 2009)

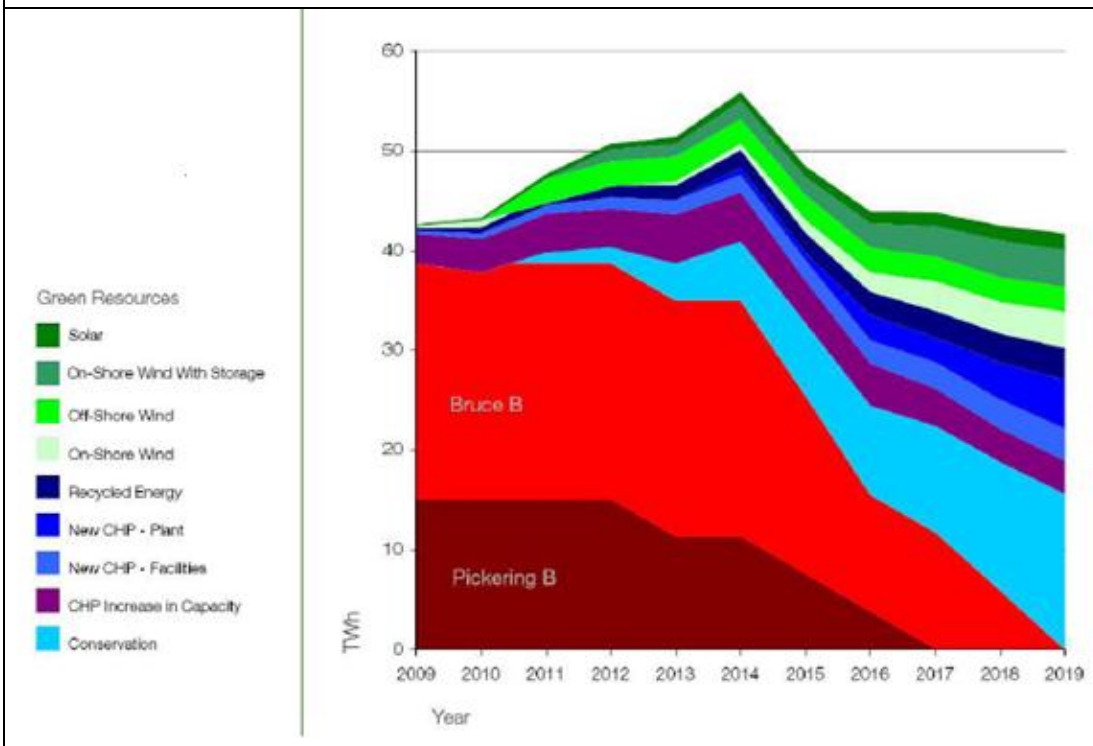

Figure 2: Ontario Plan for Renewable Energy Sources (Burda & Peters, 2008)

2.2 Electricity Demand

Electricity demand varies by the hour each day, and also varies by season. Figure 3 outlines the typical electricity demand curve observed over a 24 hour period. As observed, although demand is higher during winter and summer, compared to spring, and fall, the hourly demand curves do not change very often.

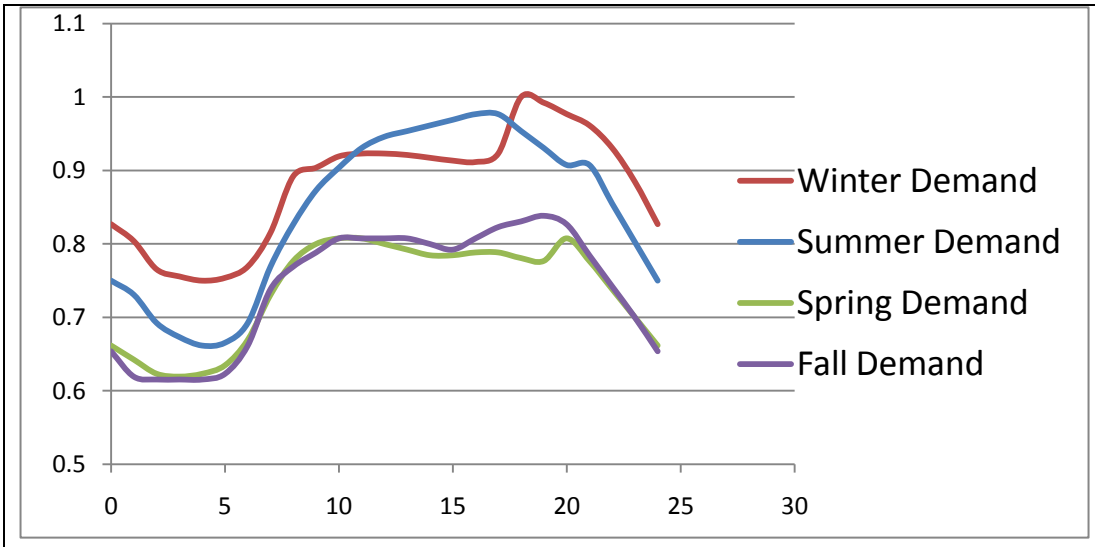

Figure 3: Typical Normalized Electricity Demand Curves Obtained in Ontario (Normalized value vs. Hour of the day). Data obtained from (Zandt, 2006)

2.2.1 Current Electricity Supply Methods:

The current electricity demand is met by using four main sources in Ontario: nuclear, natural gas, coal, and hydro. Nuclear energy is used to meet base load electricity demand which is relatively constant throughout the year, and coal and natural gas power are used to meet the increases in hourly demand. However, the use of these technologies imposes an environmental penalty. Nuclear reactors produce radioactive waste which has to be safely stored. Coal and natural gas emit CO_2 to the environment resulting in global warming, they pollute air through increased particulate matter and nitrous oxides, they produce sulphur oxides which result in acid rain which destroys crops, and they release heavy metals which result in groundwater

poisoning. Therefore, new methods of meeting peak electricity demand with reduced reliance on nuclear power need to be considered.

2.2.2 Hydrogen Economy

Currently, much of the world is locked in what can be termed as the 'fossil fuel' economy. Much of the energy used today for utilities, and transportation comes from fossil fuels such as oil, coal, and natural gas. However, fossil fuels are finite. Recent trends in fossil fuel use indicate that global oil and natural gas production will likely reach its peak around 2030 and 2060 respectively (IEA, 2008). While coal is still available in abundance comparatively, it has been regarded as the primary source of carbon dioxide pollution which contributes significantly towards global warming. Therefore, alternative technologies will have to be considered to replace fossil fuels as the primary source of energy. It is in this context that the concept of a 'hydrogen' economy was conceived (Bossel & Eliasson, 2003).

Hydrogen is an energy carrier that can be produced from a variety of energy resources such as fossil fuels through steam methane reforming, and through nuclear and renewable energy sources by the electrolysis of water. It can be used for multiple end-uses such as production of fertilizers, fuel for transportation, and as a medium for energy storage that can be transported from remote areas of generation to sites of energy demand. A hydrogen economy concentrates on the study of the economic aspects associated with the production, distribution, and utilization of hydrogen in energy systems (Dunn, 2002; US National Research Council, 2004; Winter, 2005). Hydrogen, when made from renewable sources and nuclear energy, is a zero-emission fuel, and is viewed as the only fuel that can reduce GHG emissions in the transportation sector to 80% below 1990 levels. It also reduces dependence on non-renewable resources by establishing a wide local resource base from which hydrogen can be obtained. Hydrogen vehicles are considered the only vehicles that can reduce urban air pollution costs to almost zero by 2100 (NHA, 2009). Figure 4 outlines the comparison of various technology options for transportation.

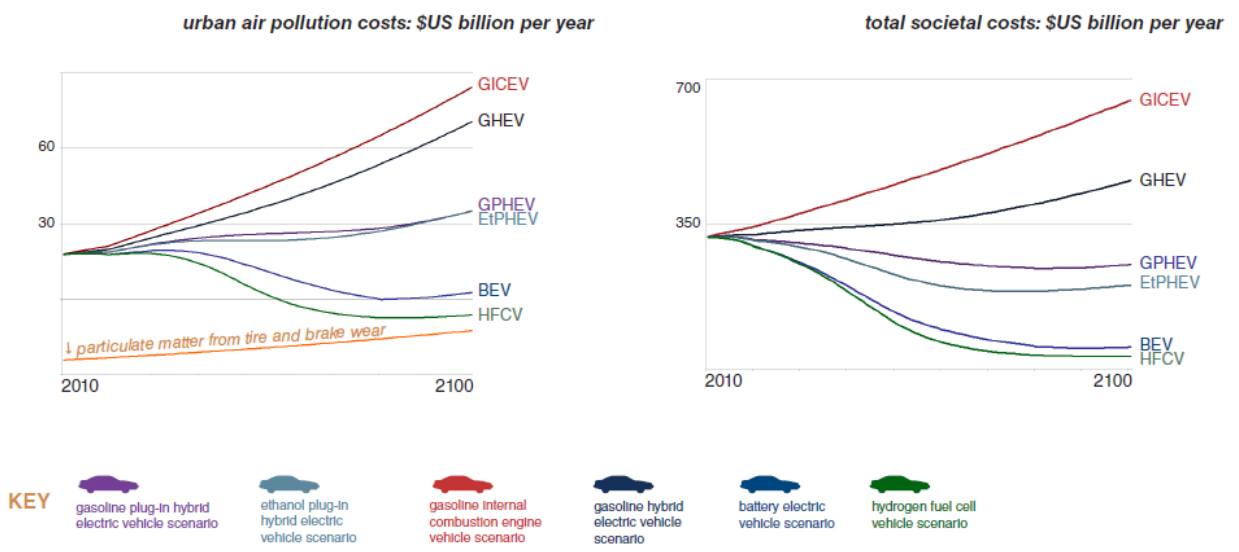

Figure 4: Comparison of Various Propulsion Technology Options for Air Pollution Costs (NHA, 2009)

While hydrogen economy holds its promise, there are strong advocates and opponents of the hydrogen economy, particularly when compared to what is known as the 'electron' economy (Bossel, 2006). Hydrogen, when compared to electricity has a lower well to wheel efficiency. However, the 'electron' economy does not address the storage issues associated with energy storage in batteries. This is pivotal in harnessing energy from renewable sources where energy supply intermittency can be accounted for (Geidl & Andersson, 2007). Furthermore, low range of battery electric vehicles due to low battery energy densities, long recharging times, and short lifetimes further inhibit the potential of pure electrical transportation systems becoming mainstream in the transportation sector (Burke, 2007).

Although given the current state of technological development there are several concerns regarding production, distribution, storage and use of hydrogen, many of these concerns should be addressed with the further development of the key enabling technology (e.g. fuel cells and hydrogen storage), and during the development of renewal of infrastructure within the energy systems (Andrews, 2006). Several infrastructure options can be considered for efficient utilization of hydrogen generation and storage systems. From the perspective of distributed

energy generation, small-scale production of hydrogen through electrolysis with electricity from local wind turbines have been considered to provide emission-free and commercially feasible hydrogen production (Marban & Valdes-Solis, 2007). Additionally, generation of localized hydrogen using grid electricity for back-up power, and for hydrogen fuelling stations can be used to serve niche hydrogen vehicle markets (Hydrogenics Corp, 2009). However, such a system would require hydrogen to be stored in tanks, which are more expensive than underground hydrogen storage, particularly salt caverns, and would have more trouble capitalizing on economies of scale due to high transportation and distribution costs, thereby making the price of electricity per MWh more expensive than other options (Hammerli, 1984).

From the perspective of centralized energy generation, hydrogen can be used to store excess electricity generated from other energy sources during periods of low electricity demand using electrolyzers, and this hydrogen can be converted back to electricity to meet peak electricity demand using fuel cells. In addition, some of the excess hydrogen produced can also be used to meet industrial and transportation chemical and energy demand. Such a system will play a key role in CO_2 abatement, thereby reducing expenses in environmental remediation and capture and storage of CO_2 underground. Therefore, such an integrated energy system could prove to be economically viable. Hence, this work consists of modelling a hub consisting of electrolyzers, fuel cells, nuclear reactors, biomass and coal boilers, and renewable technologies such as solar and wind turbines. The electricity generation profiles are mapped and applied to the hub to meet grid electricity demand, and to produce excess hydrogen for meeting the predicted hydrogen economy in transportation and industrial sectors. The hub is then analyzed for profitability, and the impacts of various technologies on profitability are considered.

2.2.3 Energy Hub

The world has three major energy sources: fossil fuels, solar radiation, and nuclear. Traditionally, there has been the assumption that these three are competing sources. Nuclear energy was seen only to meet baseload demand, fossil fuels to meet peak demand, and renewables not considered due to their intermittency. Hydro-power (which is a result of solar radiation) is clearly the most desirable and key contributor to Ontario power generation needs for both baseload and peak demand. But, available locations for future hydro expansion in Ontario are limited. Combining the three major sources of energy together with some energy storage capacity allows optimal use of all available resources. Hydrogen provides the means for that energy storage. An energy hub is composed of different storage and converter devices such as transformers, micro turbines, electrolyzers, and fuel cells, and is an interface between energy loads (e.g. electricity, heat, compressed air, and hydrogen demand for transportation) and primary energy vectors (e.g. electricity, natural gas, heat, and hydrogen) (Geidl & Andersson, 2007; Geidl et al., 2007). The role of an energy hub is to primarily optimize the use of power and heat generation facilities for as many end uses as economically possible, and to minimize power and heat loss. Several energy hubs functioning as integrated systems can be studied simultaneously. Since different technologies considered have different characteristics, with particular costs associated with different energy sources and related energy carriers, use of each of these technologies can be evaluated and optimized in the context of the overall energy hub (Bakken & Holen, 2004).

An energy hub consists of power generation systems, power storage, and power distribution systems. In order to harness power from intermittent renewable sources, it is imperative to have a low cost energy storage option. Figure 5 outlines the storage options considered, and their subsequent capital costs. As can be clearly observed, large scale underground hydrogen storage proves to be the most economic form of energy storage (Converse, 2006) when considering power from renewable sources primarily.

Capital cost of energy storage

Technology	Source	Capital cost $/kWh stored	Efficiency (%)	$/kWh recovered
Pumped hydro	Schoenung and Burns, 1996	16.8	75/87	19.3
Secondary batteries	Schoenung and Burns, 1996	200+replacement[a]	75/87	230
Lead acid	Cassedy, 2000	150–200		
Flow batteries	Electricity Storage Association	125–1000	75–85/90	>150
Flywheels	Schoenung and Burns, 1996	800	90	
Underground storage of compressed air with expansion through a gas turbine	Schoenung and Burns, 1996	10	70+fuel	
Compressed air in vessels	Schoenung and Burns, 1996	250	60+fuel	
Capacitors	Schoenung and Burns, 1996	1.3×10^7	95	
Underground storage of compressed hydrogen gas	Padro and Putsche, 1999	0.058–0.29	51/60[b]	< 0.48
Underground storage of compressed hydrogen gas	Dickson et al., 1977	0.18[c]		

[a]Five-year replacement cycle assumed and included in the $/kWh at 5% interest.
[b]*Source*: Hammerschlag and Mazza (2005).
[c]The published capital cost of underground storage of hydrogen was about $20 per million BTU capacity in 1976 dollars (Dickson et al., 1977), or $52.63 per million BTU ($0.18 per kWh) in year-2000 dollars, using a cost deflator of 0.38.

Figure 5: Energy Storage Cost Comparison for Harnessing Power from Renewable Resources (Converse, 2006)

Several hubs using hydrogen for energy storage have been analyzed to meet grid electricity demand only. When analyzing the technical and economic feasibility for hydrogen used as an energy carrier in conjunction with renewable energy sources (RES) in Australia, the net electricity price per MWh proved to be more expensive compared to the price per MWh for domestic customers (Hajimiragha et al., 2007; Shaykaa & Musgrave, 2005). When optimal operation of hydrogen storage with intermittent RES was analyzed in European utility markets, the results obtained suggest that use of hydrogen significantly increases the hub's profitability. Sale of oxygen and use of heat produced during electrolyzer operation could further enhance the hub's profitability (Korpas & Holen, 2006). Another study indicates that cogeneration of hydrogen and electricity by integrating nuclear plants, and wind turbines, with electrolyzers further enhances profitability of the hub with hydrogen costing approximately $ 2 per kg (Miller & Duffey, 2006).

Therefore, alternative sources of revenue such as credits or rebates from governments for abating air pollutant emissions, and transportation fuel revenue must be considered in conjunction with a hydrogen based energy hub. Recent advances in recognizing carbon dioxide as a pollutant has resulted in development of regulations towards a carbon tax system. This

increases the cost per MWh of electricity generation from fossil fuels. Furthermore, various health-related costs have been recognized as a result of air pollutants released from fossil fuels. These are avoided by obtaining hydrogen from clean energy sources. In addition, hydrogen can also be distributed as a fuel for transportation systems which provide premium revenues for hydrogen ($ 100 – 125 per MWh as opposed to $ 55 per MWh for utilities), when compared to equivalent prices for usable energy obtained from gasoline.

Forsberg (Forsberg, 2009) demonstrates the ability to combine nuclear reactors with biomass to produce liquid fuels for transportation, and the proposed Hydrogen Intermediate and Peak Electrical System (HIPES) where fuel cells with nuclear reactors and an underground hydrogen storage system to take advantage of storing electrical energy during off-peak hours, and selling the electricity during peak hours (Forsberg, 2009). Figure 6 outlines such a process.

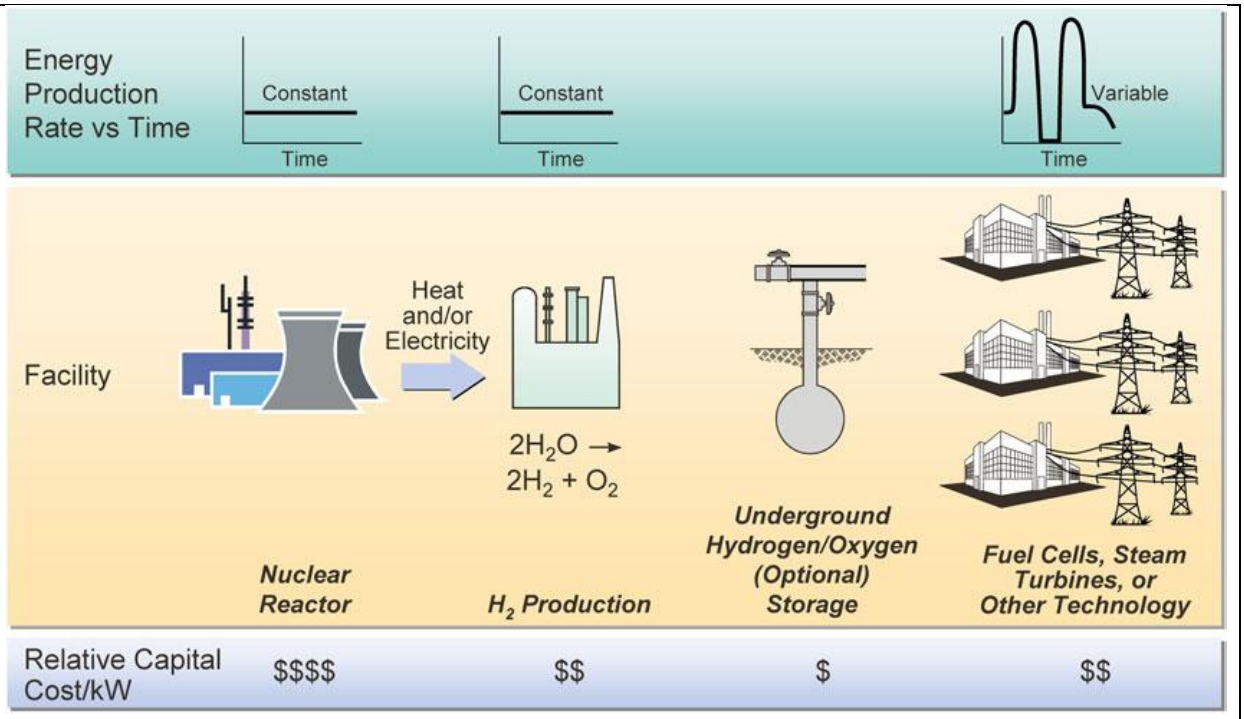

Figure 6: Hydrogen Intermediate and Peak Electrical System (Forsberg, 2009)

This work focuses on applying this concept to a specific geographic location while focusing on changes in power supply and demand from various power sources every hour with respect to

Nanticoke, Ontario. Specifically, for this work, a network of solar photovoltaic panels, wind turbines, and a bio-digester is coupled with a nuclear reactor to meet base load and peak electricity demand will be considered. However, due to the intermittent nature of solar and wind energy production, hydrogen technology and the use of hydrogen as an energy vector within clean energy hubs is seen as a way to implement intermittent renewable power sources. Electrical energy obtained from renewable sources can be converted and stored as hydrogen, which, in turn, can be converted back to electrical energy using fuel cells, and / or can be distributed for transportation and industrial demands as a hydrogen economy develops. Profitability for such a hub and the economic viability of technological options and their uses for this hub are also considered. Figure 7 represents a schematic of the proposed energy hub.

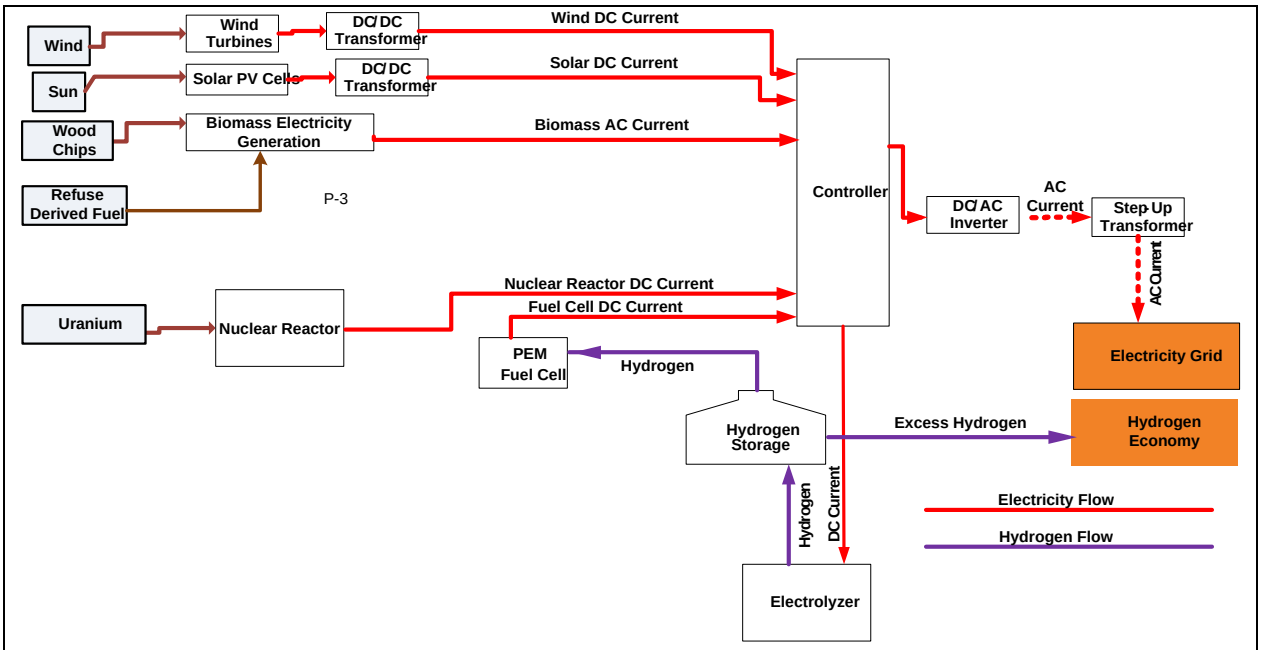

Figure 7: Potential Vision for An Energy Hub

2.3 Background of Nanticoke region

In order to demonstrate the value of clean energy hubs, this work will focus on a specific case study of a clean energy hub for the Nanticoke region.

2.3.1 Location Description

Nanticoke is located in Haldimand County, 124 km south-east of London, Ontario, and 60 km south of Hamilton, Ontario facing the east shore of Lake Erie. The site for potential hub construction has an area of 900 hectares. One of the most important features of the Nanticoke power plant that make it an ideal location for decommissioning and development of a new power plant is the infrastructure that already exists. The site has immediate access to highways, Lake Erie, and railway tracks (railways operated by Railink). In addition, the site is surrounded by a 2 km by 1.5 km area regarded as heavy industrial region, which provides potential hydrogen demand, and land that can be used for solar technologies. For example, the site is neighboured by US Steel Canada, and Imperial Oil Natural Gas Plant. Figure 8 provides a detailed picture of the site.

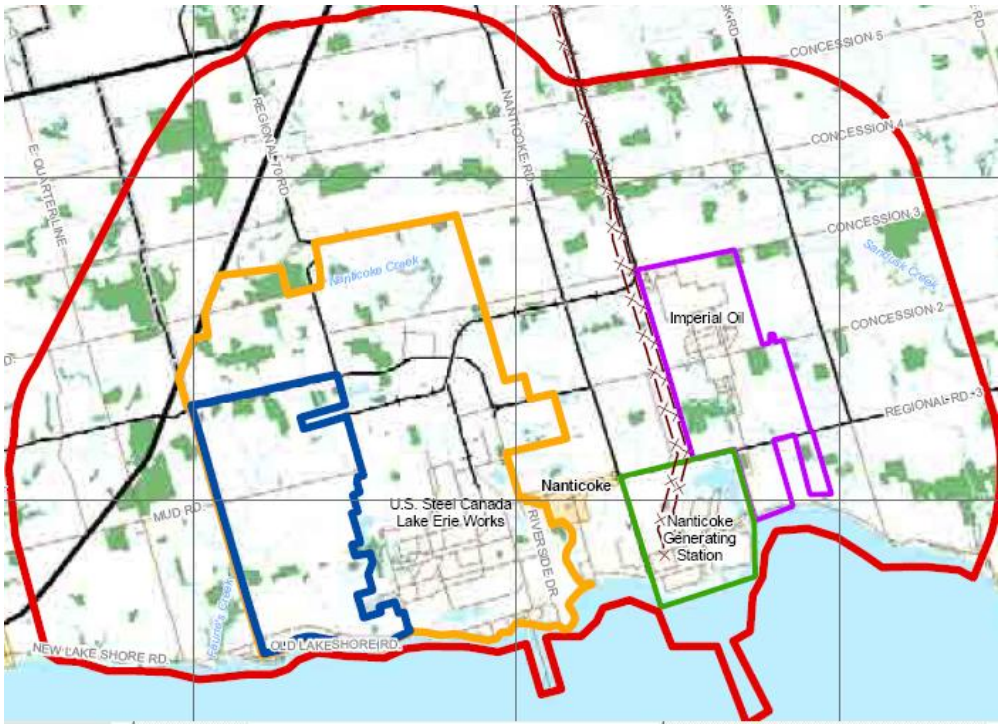

Figure 8: Overview of Nanticoke Site (Bruce Power, 2008)

2.3.2 Electricity Infrastructure in Nanticoke

The current coal generating plant operated by OPG supplies a peak power of 3750 MW through an existing electrical grid and is scheduled to close by 2014. The proposed energy hub would be situated in the 4500 acre Lake Erie Industrial Park (LEIP). Figure 9 provides an overview of the transmission lines that connect to Nanticoke, Ontario. Several transmission lines such as the 500 kV transmission lines that connect to Longwood, London, Bruce, Milton, and Middleport would be capable of transmitting all of the power generated from the new hub once the coal generating station has been phased out (Bruce Power, 2008).

Source: Hydro One Networks Inc., and OPA

Figure 9: Transmission Network on South-western Ontario (Bruce Power, 2008)

2.3.3 Wind Energy Profile in Nanticoke

The following table was gathered from the Canadian Wind Energy Atlas (Environment Canada, 2003):

Table 1: Wind profiles for Nanticoke Region (42.009 N, 79.971 W, 50 m. height)

Period	Mean Wind Speed	Mean Wind Energy	Weibull shape parameter (k)	Weibull scale parameter (A)
Annual	4.17 m/s	77.75 W/m^2	1.79	4.68 m/s
Winter (DJF)	5.11 m/s	122.25 W/m^2	2.09	5.77 m/s
Spring (MAM)	4.41 m/s	89.38 W/m^2	1.84	4.96 m/s
Summer (JJA)	3.21 m/s	33.31 W/m^2	1.90	3.62 m/s
Fall (SON)	4.40 m/s	84.88 W/m^2	1.91	4.96 m/s

It is important to note that there are two wind farms that have already been developed in this region. The first one is the Mohawk Wind farm that is located southwest of Dunnville, Ontario with a generation capacity of 9.9 MW. A second, and largest on-shore wind farm in the region, is located in Port Burwell, Ontario. It consists of 66 wind turbines with a generation capacity of 99 MW. A third wind farm called the Byng Wind farm is also being developed with identical turbines and is expected to be developed in 2009/2010. Based on these wind farms, it is evident that wind farms are feasible in this region. Currently off-shore wind farms for the region are also being considered. A feasibility study for a 300 MW off-shore wind farm in Nanticoke has been initiated in 2008 by AIM PowerGen. Therefore, a maximum of 300 MW of off-shore wind capacity is considered for this model.

2.3.4 Solar Energy Profile in Nanticoke

Table 2 provides the average daily radiation of solar energy obtained on ground (insolation), and its photovoltaic energy potential. In Canada, where the average insolation lies between 9 – 24 MW per m^2, Nanticoke receives about 16.5 MW per m^2. The proximity to a grid and the fact that the region is surrounded by farmlands makes it an excellent region to take advantage of solar energy due to very little shadow effects.

Table 2: Solar Data for Nanticoke (Natural Resources Canada: Interactive PV Insolation Maps)

	Daily Insolation (MJ/m^2)	Annual Photovoltaic Potential (kWh / kW (monthly hour equivalent potential)
Annual Average Range	15 – 18	1100 – 1200
January	9 – 12	60 – 80
February	12 – 15	60 – 80
March	15 – 18	100 – 120
April	15 – 18	100 – 120
May	18 – 21	120 – 140
June	18 – 21	120 – 140
July	18 – 21	120 – 140
August	18 – 21	120 – 140
September	15 – 18	100 – 120
October	12 – 15	80 – 100
November	9 – 12	40 – 60
December	6 – 9	40 – 60

2.3.5 Biomass Profile in Nanticoke

Haldimand County is home to a wide variety of agricultural production. It has 225,000 hectares of farmland occupied by 951 farms, of which, at least 336 specialize in vegetation production (as opposed to grazing lands, and animal farms). These present an excellent opportunity for energy crop production (McSweeney & Associates, 2008).

In addition, Haldimand County has a population of roughly 100,000, and operates two waste sites, Tom Howe Landfill Site, and Canborough Landfill Site. Table 3 represents the annual amount of waste, and municipal solid waste collected in tonnes by the two landfill sites between years 2001-2007, of which roughly 42% is residential waste. In addition, roughly 150 tonnes of yard waste is collected per year in November and April of each year, and it is estimated that roughly 641.9 tonnes of waste is composted in residential backyards. The potential for energy crops in this region is discussed later in this report.

Table 3: Waste Data for Haldimand County (Haldimand County Solid Waste Activity Update, 2008)

Collection Year	Tonnes Received	Municipal Solid Waste (Tonnes)
2001	63492	16000
2002	62405	9000
2003	63409	8000
2004	63155	12000
2005	65050	12500
2006	68125	12000
2007	60171	11179

These sites can be a source of biomass for production of methane through bio-digesters. Energy crops can be utilized during peak summer and winter, whereas municipal solid waste can be available year round.

2.3.6 Current Industries in Nanticoke

The manufacturing sector is the biggest industry in Nanticoke employing 22% of the local population. The agricultural industry is a distant second with 10% of the workforce, followed by the utilities industry which employs 5%. This concentration of manufacturing provides the opportunity for a hydrogen market, which can be purchased by companies to run hydrogen fuel-cell based forklifts. Also, hydrogen can be purchased for chemical production by US Steel, and Nelson Steel directly (which is currently supplied by Air Liquide from a steam methane reformer). Hydrogen can also be purchased by Mc Burney Transportation to run fuel-cell based trucks in the region. Access to railways and natural gas pipelines also allows for transportation of hydrogen to more distant markets, and with a slight extension, trains such as the Go Train could be serviced from this region. Therefore, considering all aspects, Nanticoke proves to be an excellent site to take advantage of available renewable energy potential, and to develop a future hydrogen market. While the model for this project will focus on storing enough hydrogen to meet peak electricity demand for the hub, future model analysis will also consider potential hydrogen markets. This document will now discuss technology options and considerations for each of the energy resources.

2.4 Hydrogen Production

2.4.1 Benefits of Hydrogen

The use of hydrogen presents benefits from a safety, design, efficiency, economic, and environmental standpoint. Thus it is envisaged that future low-carbon economies will exploit electrolyzer technology to deliver ‘low/zero carbon hydrogen’ for fuel cells and other uses. The primary properties of hydrogen that make it beneficial are its low density and high thermal conductivity.

Hydrogen can be used as both an energy carrier and a storage medium. In periods of low electricity demand, it can be produced via electrolysis or high temperature electrolysis. Both of these methods will be further discussed below. In addition to industrial and transportation demands, hydrogen is used as a coolant in nuclear reactors, thereby reducing wind age losses by 30 to 40% (Asarizadeh, 2007).

From an environmental perspective, the use of hydrogen from renewable or nuclear power is preferable to other hydrocarbons as it eliminates the production of CO_2 and air quality pollutants. Since carbon dioxide is primarily responsible for global warming through the greenhouse effect, the reduction of CO_2 will reduce global warming. In addition the use of hydrogen in urban environment for transportation will result in reduction of urban air pollution. Energy from intermittent renewable energy sources can be stored as hydrogen. Hydrogen provides a very flexible fuel, which can be used in a number of ways. It can be used in electrical regeneration in fuel cells or conventional generators, as a transport fuel for vehicles with either internal combustion engines or fuel cells as motive power, and as direct heating and air conditioning.

From an economic standpoint, hydrogen can be used in industrial markets for fertilizer production and steelmaking, transportation markets for vehicle propulsion, and for renewable electricity generation using fuel cells. Thus the use of hydrogen can reduce the dependence on foreign fossil fuels providing increased energy security. Electrolyzer technology may be implemented at a variety of scales wherever there is an electricity supply to provide hydrogen and/or oxygen for virtually any requirement.

2.4.2 Electrolysis

There are three principal types of water electrolyzers: alkaline (referring to the nature of its liquid electrolyte), Polymer Electrolyte Membrane (PEM) (referring to its solid polymeric electrolyte), and solid-oxide (referring to its solid ceramic electrolyte). The alkaline and PEM electrolyzers are well proven technologies with thousands of units in operation, while the solid-oxide electrolyzer is still in research phase. While, the PEM electrolyzer is particularly well suited to highly distributed applications, the alkaline electrolyzer currently dominates global production of electrolytic hydrogen (Sharif et al., 2005). Electrolyzers produce gaseous hydrogen and oxygen from water. Alkaline electrolysis is based on the following reactions:

Anode $4OH^- \rightarrow O_2 + 2H_2O + 4e^-$

Cathode $4H_2O + 4e^- \rightarrow 2H_2 + 4OH^-$

Overall Reaction $2H_2O \rightarrow 2H_2 + O_2$

The efficiencies of electrolyzers vary widely and are considered to be between 80% and 95% (Ivy, 2004).

Alkaline Electrolyzers

The operation of an alkaline electrolyzer depends on the electrolyte solution (usually potassium hydroxide) for transferring hydroxyl ions. Alkaline electrolyzers operate at relatively low current densities of less than 0.4 A / cm^2 with conversion efficiencies ranging from 60-90%.
The purity of the exiting H_2 and O_2 gases tend to be over 99.2%. Modern alkaline electrolyzers are capable of achieving efficiencies of 90%, and are able to deliver high pressure hydrogen at 30 bar and above without further compression equipment. Alkaline electrolyzers have several advantages over PEM electrolyzers. They do not require Platinum-based catalysts, thereby reducing operating costs, they are a well proven technology compared to PEM electrolyzers, and are less expensive than PEM electrolyzers. (Newborough, 2004).

Polymer Electrolyte Membrane Electrolyzers

PEM electrolyzers tend to be more expensive than alkaline electrolyzers because of the use of precious metal catalysts such as Platinum and Ruthenium. Instead of a circulating liquid electrolyte, the membrane functions as a solid polymeric electrolyte for proton transfer. As a result, these electrolyzers can operate at much higher current densities of 1 to 2 A per cm^2, thereby resulting in smaller unit sizes for the same amount of hydrogen throughput. Currently, PEM electrolyzer efficiencies range between 50% and 90%, however, these electrolyzers are unable to attain high efficiencies at high current densities. Nevertheless, the purity of hydrogen produced is higher compared to alkaline electrolyzers (approximately 99.999%), thereby making it an excellent candidate for ultra-pure hydrogen applications. PEM electrolyzers also produce hydrogen at higher pressures of 200 bar without auxiliary equipment. They are also able to withstand higher variations in electric power. However, to date, PEM electrolyzers have only been used in small scale, and large scale PEM electrolyzers are still in development phase (Newborough, 2004). Therefore, since the hub requires large scale production of hydrogen, alkaline electrolyzers were chosen for the model.

The Solid Oxide Electrolyzer

Solid Oxide electrolyzers operate at higher temperatures of 800-1000°C, and as such this process is sometimes termed 'high temperature steam electrolysis'. A solid ceramic electrolyte made of zirconium (zirconium/ceria) is used for transfer of oxygen ions, thereby resulting in hydrogen released as the by-product. These electrolyzers are particularly useful in conjunction with large scale power plants that produce high temperature waste heat that can be used for hydrogen production. These electrolyzers require the least amount of electricity per kg of hydrogen generated. However, current solid oxide electrolyzers have comparatively short operating lives, and have significant thermal cycling and gas sealing issues (Newborough, 2004). Therefore, solid oxide electrolyzers, while hold promise in the future for large scale operations, are currently still in development phase and are not considered for this work.

Assessment of the Existing Electrolyzer Industry and Markets

Currently there is a significant market for hydrogen. About half of the current hydrogen produced is used for ammonia production for fertilizers, a third is used by the petrochemical industry for producing plastics and liquid fuels, and the remainder for applications including edible fat hydrogenation, methanol production, float glass production, generator cooling, weather balloons and rockets. Worldwide hydrogen demand currently exceeds 500 billion m^3 and roughly speaking its sale value is in the region of $100 billion (Newborough, 2004). The predominant source of hydrogen is natural gas (over 95%), which is a fossil fuel. Therefore, alternative sources of hydrogen will be needed to meet even current hydrogen demands in the future. Furthermore, there is a push towards developing fuel cell technology for use in the transportation sector. This expands the hydrogen market to include the billion dollar gasoline market in Canada. Electrolyzer technology provides the flexibility of obtaining hydrogen from water using electricity generated from low carbon-intensive renewable sources such as wind, and solar. Since these renewable energy sources are abundantly available, as hydrogen from natural gas becomes more expensive due to resource scarcity, hydrogen from electrolyzers will become more economical. Although electrolysis yields hydrogen of higher carbon-footprint than the input electricity, electrolyzers can be matched to supplies of low-carbon, renewable or nuclear electricity, and so it is possible to produce hydrogen of low/zero carbon-footprint.

Electrolyzer technology could thus be at the heart of future low-carbon economies where hydrogen is utilized as a transport and industrial fuel (Kroposki et al., 2006).

Furthermore, several new markets may emerge for low/zero-carbon oxygen. These include applications such as oxygen enrichment in furnaces, oxy-hydrogen combustion processes for increased thermal efficiency from power plants, and high-efficiency fuel cells using pure oxygen instead of air. Therefore, the future value of oxygen as a bankable by-product must also be considered. In future low-carbon economies, electrolyzer technology could provide a central solution to meeting both the power management needs of the electricity sector and the needs of the transport and industrial demand (Forsberg, 2009).

There are a number of potential suppliers of commercial electrolysis equipment, including Hydrogen Technologies, Hydrogenics Power Inc, Proton Energy Systems Inc., Norsk Hydro., and Teledyne Technologies (Asarizadeh, 2007). The cost range for electrolysis tends to be between $4 per kg and $19 per kg of hydrogen (Ivy, 2004). However, it is important to note that the costs quoted here are largely dependent on the amount of hydrogen produced and also on the price of electricity. Since the clean energy hub considered in this work utilizes excess electricity on site, the costs are anticipated to be lower than what is quoted above. Figure 10 summarizes the various types of electrolyzers considered, and the conditions under which they can be used.

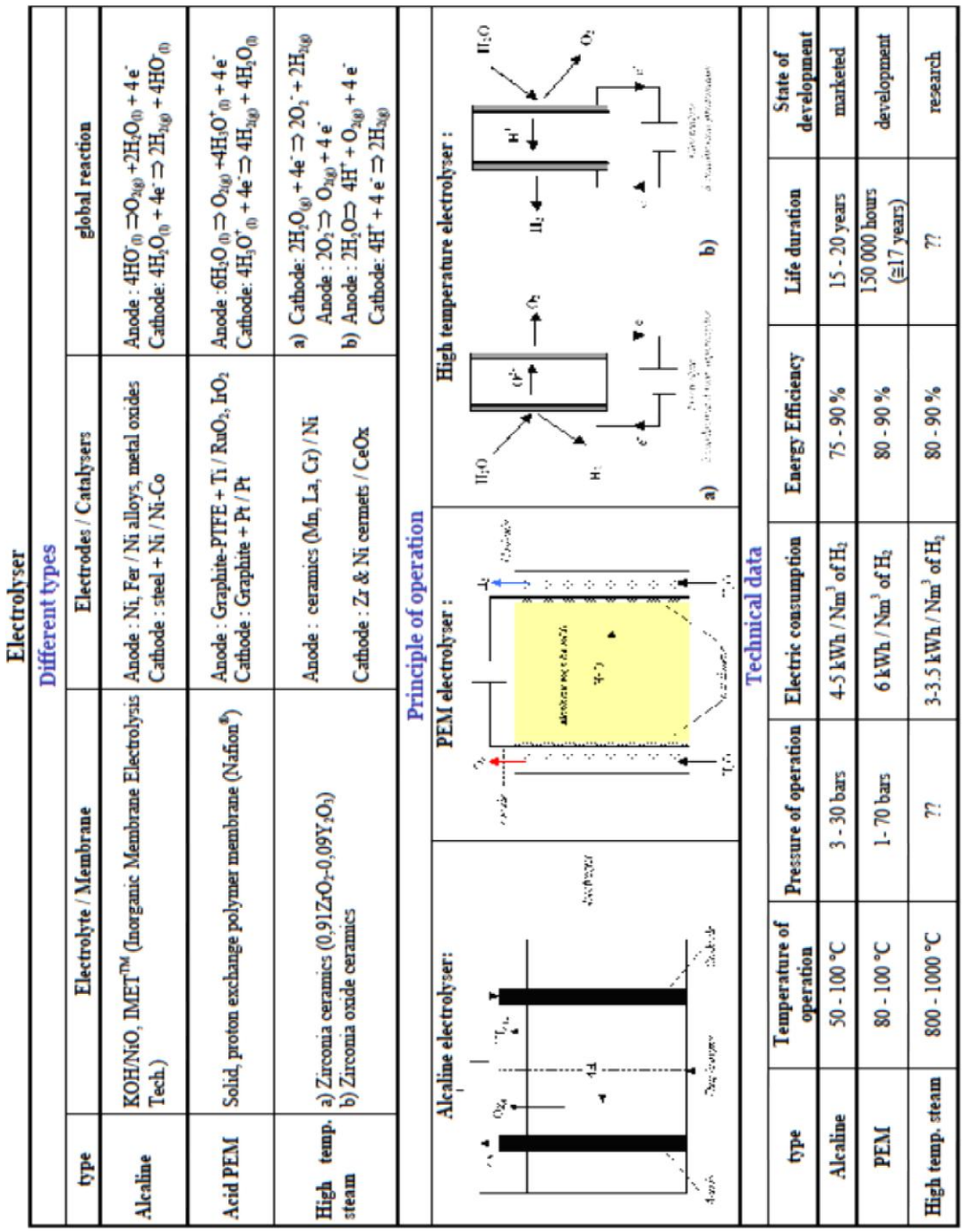

Electrolyser

Different types

type	Electrolyte / Membrane	Electrodes / Catalysers	global reaction
Alcaline	KOH/NiO, IMET™ (Inorganic Membrane Electrolysis Tech.)	Anode : Ni, Fer / Ni alloys, metal oxides Cathode : steel + Ni / Ni-Co	Anode : $4HO^-_{(l)} \Rightarrow O_{2(g)} + 2H_2O_{(l)} + 4e^-$ Cathode: $4H_2O_{(l)} + 4e^- \Rightarrow 2H_{2(g)} + 4HO^-_{(l)}$
Acid PEM	Solid, proton exchange polymer membrane (Nafion®)	Anode : Graphite-PTFE + Ti / RuO_2, IrO_2 Cathode : Graphite + Pt / Pt	Anode : $6H_2O_{(l)} \Rightarrow O_{2(g)} + 4H_3O^+_{(l)} + 4e^-$ Cathode: $4H_3O^+_{(l)} + 4e^- \Rightarrow 4H_{2(g)} + 4H_2O_{(l)}$
High temp. steam	a) Zirconia ceramics ($0{,}91ZrO_2$-$0{,}09Y_2O_3$) b) Zirconia oxide ceramics	Anode : ceramics (Mn, La, Cr) / Ni Cathode : Zr & Ni cermets / CeOx	a) Cathode: $2H_2O_{(g)} + 4e^- \Rightarrow 2O_2^- + 2H_{2(g)}$ Anode : $2O_2 \Rightarrow O_{2(g)} + 4e^-$ b) Anode : $2H_2O \Rightarrow 4H^+ + O_{2(g)} + 4e^-$ Cathode: $4H^+ + 4e^- \Rightarrow 2H_{2(g)}$

Principle of operation

Technical data

type	Temperature of operation	Pressure of operation	Electric consumption	Energy Efficiency	Life duration	State of development
Alcaline	50 - 100 °C	3 - 30 bars	4-5 kWh / Nm^3 of H_2	75 - 90 %	15 - 20 years	marketed
PEM	80 - 100 °C	1- 70 bars	6 kWh / Nm^3 of H_2	80 - 90 %	150 000 hours (≅17 years)	development
High temp. steam	800 - 1000 °C	??	3-3.5 kWh / Nm^3 of H_2	80 - 90 %	??	research

Figure 10: Overview of Various Electrolyzer Options (IT Power, 2004)

2.4.3 Fuel Cells

Critical to the hydrogen economy is to take hydrogen and efficiently turn the hydrogen back into electricity. Although invented in 1839, fuel cells are now emerging as a promising new power-generation technology for the future. Fuel cells are environmentally clean, quiet, and efficient method for generating electricity and heat from hydrogen. Thus, in this work, a fuel cell will be selected to convert the accumulated hydrogen during periods of excess production to generate electricity. A fuel cell has been selected over a battery or hydrogen combustion system. There are many advantages to fuel cell technology (Canadian Hydrogen Fuel Cell Association, 2008):

1. High Efficiency - Fuel cells convert chemical energy directly to electrical energy, therefore there is no requirement for a conversion of heat to mechanical energy. Depending on type and design, the fuel cell system have an electric energy efficiency range from 40% to 60%, based on the lower heating value of the fuel, as opposed to heat engines which are roughly 20% to 25%. The fuel cell operates at a more uniform efficiency under changing load conditions compared to heat engines. For instance, in an internal combustion engine, the engine accepts heat from a high temperature source (T_H), converts part of the energy into mechanical work and rejects the remainder to a heat sink at a low temperature (T_L). The greater the temperature differences between source and sink, the greater the efficiency. The maximum efficiency of a heat engine = $(T_H-T_L)/T_H$. Therefore, fuel cells are notably more efficient than combustion systems. When co-generation is considered, fuel cells can achieve efficiencies above 80% while internal combustion engines can only achieve efficiencies below 40%.
2. Lower Environmental Burden and Emissions – Fuel cells typically produce electricity at lower temperatures compared to combustion systems. This results in much lower air pollutant emissions and no emissions if hydrogen is the fuel.. Emissions of acid rain and smog components, such as SO_x and NO_x, are especially low.
3. High Reliability – Since there are few moving parts in a fuel cell system, a high reliability can be achieved.
4. Flexibility of Design - Modular installations are used to match loads and improve reliability while providing size flexibility. Since fuel cells have significantly lower environmental impact compared to fossil fuels, the permits and sitings for fuel cells are

easier to obtain for both centralized and distributed generation of electricity. Therefore, innovations in fuel cell stack design to suit the power system can be more easily implemented due to fewer regulatory barriers.

5. Easily Refuelled – Fuel cells can be quickly recharged or refuelled (unlike a traditional battery), and this can be repeated through a large number of cycles.
6. Co-generation Capability – High-quality and low-quality heat is available for co-generation, heating, and cooling in residential, commercial, and industrial applications. Certain types of fuel cell systems can be combined with gas turbine systems resulting in electrical conversion efficiencies over 80 percent (LHV). Low-grade heat can also be used to heat offices and homes, and to heat water for residential purposes. In these cases the total energy efficiency of the fuel cell systems may approach 85 percent (FuelCells.org, 2008).

Other advantages of fuel cell systems include:

- possible remote and unattended operation;
- rapid load following capability;
- reduced groundwater pollution through decreased use of hydrocarbon fuels and
- less noise pollution (FuelCells.org, 2008).

Due to these advantages, a fuel cell system was chosen as the electricity generation method to meet peak electricity demand for the hub in this work. There are still some barriers to overall market acceptance of the technology (Sharif et al., 2005):

- capital costs are high, and cost reduction targets established by government research centres have not yet been met;
- endurance and reliability has not been adequately demonstrated for large-scale power generation applications; and
- Refuelling infrastructure is not in place yet in order to take advantage of the hydrogen economy.

These barriers and the environmental benefits will be taken into consideration to determine the maximum fuel cell stack cost per MWh at which fuel cell electricity can become economically viable.

Operation of a Fuel Cell

Fuel cells are composed of an electrolyte layer in contact with an anode and cathode. The fuel, such as hydrogen, is introduced on the anode, while the oxidant, typically, oxygen is introduced from the cathode. The electrolyte permits the hydrogen ions to pass through to the cathode. Figure 11 illustrates the operation of a fuel cell.

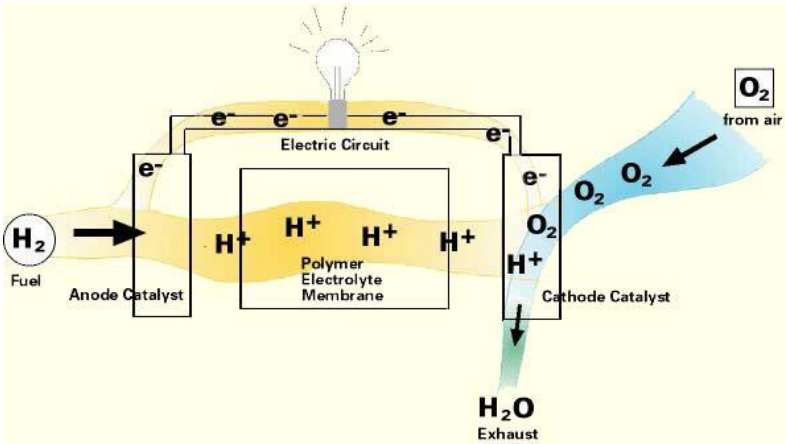

Figure 11: Operation of a Hydrogen Fuel Cell (FuelCells.org, 2008)

Types of Fuel Cells Available

The following fuel cells are currently under development or available:

	Low-temperature Fuel Cells			High-temperature Fuel Cells		
	DMFC Direct methanol fuel cell	**PEMFC** Proton exchange	**AFC** Alkaline fuel cell	**PAFC** Phosphoric acid fuel cell	**MCFC** Molten carbon fuel	**SOFC** Solid oxide fuel
Electrolyte	Proton-conducting membrane	Proton-conducting membrane	Caustic potash solution	Concentrated phosphoric acid	Molten carbonate	Ceramic
Temperature range	< 100° C	< 100° C	< 100° C	~ 200° C	~ 650° C	800 - 1,000
Fuel	Methanol	Hydrogen	Hydrogen	Hydrogen	Natural gas, coal	Natural gas, coal
Power ranges	Watts/ kilowatts	Watts/ kilowatts	Watts/ kilowatts	Kilowatt	Kilowatts/ megawatts	Kilowatts/ megawatts
Application areas (examples)	Vehicles, small appliances	Vehicles, small generators, domestic supply, block-type heat and power stations	Space	Block-type heat and power stations	Power plants, combined heat and power	Power plants, combined heat and power

Figure 12: Types of Fuel Cells (Canadian Hydrogen Fuel Cells Association, 2008)

Based on preliminary research, and design characteristics, a PEMFC (Polymer Electrolyte Membrane) fuel cell is most applicable as it meets the temperature and fuel characteristics required for the operation to work efficiently. A large number of units will be required, but this is useful in scaling operation and maintenance planning.

At this stage of model development, it is difficult to say which specific models will be considered in the clean energy hub. Actual requirements would be based on variation in electricity demand (peak shaving), efficiency, and economics. However, based on research, the following companies' products will be considered due to their use in similar power generation projects (Dvorak et al., 2007):

- Altergy Systems;
- Ballard Systems;
- Hydrogenics Corporation; and
- Plug Power Inc.

2.4.4 High Temperature Electrolysis and Other Methods of Hydrogen Production

At higher temperatures, the efficiencies for hydrogen conversion can be further improved. This is based on the equation relating free energy as sum of enthalpy and the product of temperature and entropy. However, due to maximum size restrictions, large arrays of cells are required for high temperature electrolysis (HTE). Consequently, the large cost of manufacturing and the lack of development of this technology have limited its use (Forsberg, 2004).

Steam reforming presents another method of producing hydrogen, however it will not be considered in this due to the associated CO_2 emissions and low purity of H_2 produced. Furthermore, steam reforming relies on methane as an input which has high price volatility. Furthermore, the start-up costs for steam reforming are high (Asarizadeh, 2007).

Thermo-chemical production of hydrogen from water is also a promising choice as several lab-sized demonstrations have provided compelling results and show the potential of large-scale production (Forsberg, 2004). However, an industrial application has not been developed, and

the technology is still in research stage and is likely 30 years to commercialization (Naterer et al., 2009).

2.5 Hydrogen Storage

As part of the design of a clean energy hub, a storage mechanism for hydrogen will also be recommended. Currently, the three methods under consideration are high pressure, liquefied, and metal or chemical hydride. The qualities of an ideal hydrogen storage system include high storage capacity, high volumetric density, good thermodynamics, fast kinetics, effective heat transfer, long life, high mechanical strength, and acceptable safety under extreme conditions (Cumalioglu & Ertas, 2008).

2.5.1 Underground Hydrogen Storage

One of the key advantages of hydrogen is the ability to store it in large underground systems. Unlike electricity, hydrogen can be stored inexpensively for months using the same technology as those used to store natural gas. Given hydrogen storage on a small scale is one to two orders of magnitude more expensive than on a large scale, there is added economic advantage of having a centralized hydrogen production and storage facility than decentralized or distributed hydrogen production (Forsberg, 2009). A common method of storing hydrogen underground is through underground mined salt caverns.

Essentially, salt caverns are formed out of existing salt deposits. These underground salt deposits may exist in two possible forms: salt domes, and salt beds. Salt domes are thick formations created from natural salt deposits that, over time, leach up through overlying sedimentary layers to form large dome-type structures. They can be as large as a mile in diameter, and 30,000 feet in height. Typically, salt domes used for natural gas and hydrogen storage are between 6,000 and 1,500 feet beneath the surface, although in certain circumstances they can come much closer to the surface. (Natural Gas.org, 2004)

Another method of underground hydrogen storage is in depleted natural gas reservoirs. Sarnia, Ontario is home to many depleted gas reservoirs that could be used for hydrogen storage. Figure 13 provides a summary of depleted gas reserves in the Sarnia region not far from the proposed site.

Example	Storage or production capacity	Equivalent hydrogen storage expressed in terms of multiple wells and reservoirs	Equivalent hydrogen storage expressed in terms of multiple salt caverns
Liquid carbonic, Sarnia (storage)	LH_2 storage capacity: 28.3×10^3 Nm^3	0.135% of one well, 0.012% of one reservoir	1.10% of one cavern
Air products, Sarnia (storage)	LH_2 storage capacity: 1.59×10^6 Nm^3	7.57% of one well, 0.69% of one reservoir	61.0% of one cavern
NASA, Cape Canaveral, Florida (storage)	LH_2 storage capacity: 3.22×10^6 Nm^3	15.30% of one well, 1.39% of one reservoir	124% of one cavern
Linde, Niagara Falls, NY (production)	H_2 production: 1.25×10^8 Nm^3/yr	6 wells, 0.54 reservoirs	48 salt caverns
Imperial Oil, Sarnia (production)	H_2 production: 5.95×10^8 Nm^3/yr	28 wells, 2.58 reservoirs	229 salt caverns
Tosco Refinery, California (production)	H_2 production: 1.04×10^9 Nm^3/yr	49.52 wells, 4.5 reservoirs	400 salt caverns

Figure 13: Underground Reservoir Working Capacities in Sarnia, Ontario (Venter & Pucher, 1997)

2.5.2 High Pressure Tanks

Though hydrogen has a high energy density based on its mass, its low density of 0.0899 kg/m^3 at standard conditions means that large volumes of hydrogen are required for sufficient energy. High pressure hydrogen is based on the principle of compressing hydrogen to pressures in the order of 5,000 to 10,000 psi. Commercial tanks of this nature are available to handle pressures up to 30 MPa (Cumalioglu & Ertas, 2008). Higher pressures would require thicker walls in the storage tank and increased compressor work.

2.5.3 Liquefied Hydrogen Tanks

Liquefying hydrogen is another method of increasing its energy density. It involves the cooling of hydrogen to temperatures below -150 C and storage in a sub-cooled tank. The main benefits of this procedure are that a thinner wall can be used as required pressures are in the range of 0.1 to 0.35 MPa (Cumalioglu & Ertas, 2008). Furthermore, approximately six times as much hydrogen can be stored by mass in the same sized vessel (Cumalioglu & Ertas, 2008). The main disadvantage to this method is that boil-off occurs with storage time, thereby leading to the loss of hydrogen. Furthermore, liquefying is an energy-intensive process.

2.5.4 Metal Hydride Tanks

Hydrogen can also be stored as a metal or chemical hydride. Metal hydride storage involves an exothermic reaction with a metal, thereby resulting in hydrogen forming hydride bonds with metals. When hydrogen is required, the metal hydride is heated to release the required amount of hydrogen. The advantages of this method are that a greater amount of hydrogen can be stored per unit volume of the tank compared to compressed hydrogen. However, this technology is still under development and has slow charging/re-charging rates in addition to higher operating temperatures that are required to liberate hydrogen (US DOE, 2008).

Chemical hydride storage, such as Ammonia (NH_3) is also possible. Ammonia provides high hydrogen storage densities as a liquid with mild pressurization and cryogenic constraints, and can also be easily reformed to produce hydrogen. Other chemical storage options include amine borane complexes. While amine boranes have been extensively investigated as hydrogen carriers, no commercial distribution system has ever been developed, and, as a result, will not be considered for this work. Figure 14 provides comparative costs of various hydrogen storage systems.

Method specific cost factors for liquid, salt cavern and depleted reservoir storage

	Liquid	Salt cavern	Depleted reservoir
STC, specific transfer equipment costs	• liquefaction equipment • purification equipment • pumping equipment • metering, controls, piping etc.	• reciprocating compressors • electric drives • brine transfer equipment • purification/drying plants • metering, controls, piping etc.	• reciprocating compressors • electric drives • purification/drying plants • metering, controls, piping etc.
($/kW$_{th}$)/yr	780	60	72
SRC, specific reservoir costs	• Spherical vacuum perlite insulted reservoirs • land, facilities etc.	• solution mining • well casing, wellhead • brine storage facility • land, facilities etc.	• wellhead • cushion gas • land, facilities etc.
($/kW$_{th}$)/yr	1.0	0.18	0.13
SER, specific energy requirements (kW$_{elec}$/kW$_{th}$)	0.54	0.024	0.03
EC, electricity cost ($/kWh$_{elec}$)	0.05	0.05	0.05

Figure 14: Estimated Costs of Hydrogen Storage (Venter & Pucher, 1997)

2.6 Nuclear Technologies:

In this case study, the energy hub should meet peak electricity demand of 3750 MW which is consistent with the current coal generation capacity. The following nuclear reactor models are being considered by Bruce Power:

Table 4: Nuclear Reactor Options Being Considered by Bruce Power (Bruce Power, 2008)

Nuclear Reactor Options			
Characteristic	C ANDU Reactor	Pressurized Water Reactor	
Model	ACR-1000	AP1000	EPR
Manufacturer	AECL	Westinghouse	AREVA
Country of Origin	Canada	United States	France / Germany
MW_e net per reactor	1085	1090	1600
Design Status	New Design	Under construction in China	Under construction in Finland and France
Design Life	60 years	60 years	60 years

Given the average yearly power demand from the grid is 2190 MW, it may be possible to meet electricity demand with only 2 nuclear reactors it will largely depend on the ability of electrolyzers, fuel cells, and renewables' ability to handle peak electricity demand. Therefore, a total of either 2 1000 MW reactors, 3 1000 MW reactors, or 2 1600 MW reactors will be considered for this hub.

2.7 Wind Energy

2.7.1 Background of Wind Energy

Wind energy is the energy gathered by turbines as a result of winds pushing and thereby their blades. The ultimate source of wind energy, like all renewable sources of energy, is the solar heating of the earth. Winds are generated as a result of unequal cooling of the air and due to the Coriolis force (Danish Wind Energy Association, 2003).

In the case of Nanticoke region, the following wind roses were obtained for wind speed (Environment Canada, 2003).

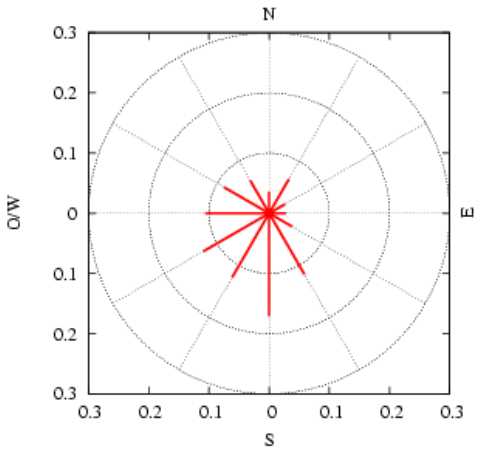

Figure 15: Wind Rose (Annual)

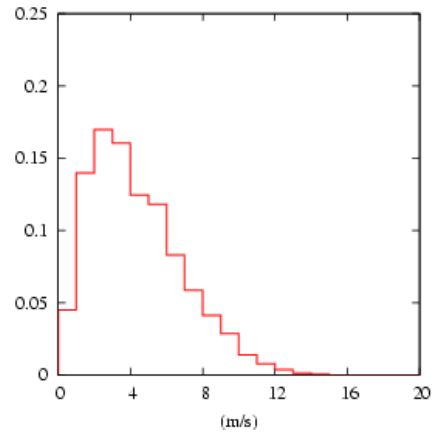

Figure 16: Annual histogram of wind speed.

The following is obtained for wind power through a rotor:

$$P = \frac{1}{2}\rho v^3 \pi r^2$$

Where:

ρ =Density of Air; v =velocity of air; r =radius of wind rotor

2.7.2 Wind Turbine Siting

In order for a wind mill to be economical, it is important to have an adequate wind velocity. In order to determine the velocity at the Nanticoke site, the following map was obtained. As observed in Figure 17, wind energy increases as proximity to shoreline decreases. Therefore, on-shore wind turbines are being considered.

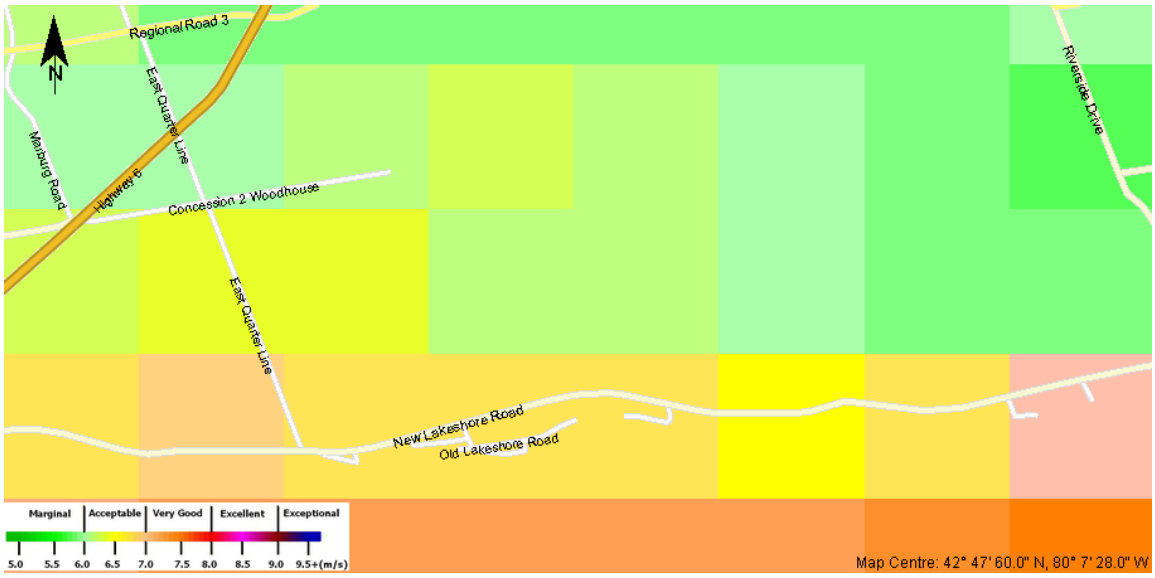

Figure 17: Wind distribution in Nanticoke, ON at 80 meters above ground level (Environment Canada, 2003)

Table 5 outlines the mean wind speeds per season for on-shore and off-shore conditions. When compared with the wind distribution at a level of 80 m, it is evident that the range for on-shore wind speed is significantly lower with regards to off-shore wind speeds. This signifies more variability for on-shore wind power compared to off-shore wind power by season. Furthermore, the velocities of wind recorded off-shore are significantly greater than that on-shore.

Table 5: Comparison of Off Shore and On Shore Wind Speeds in Nanticoke, Ontario (Environment Canada, 2003)

Period	Off-Shore Avg Wind Speed in m/s (80 m) Lat: 42.588 Long: - 80.209	On-Shore Avg Wind Speed in m/s (80 m) Lat: 42.788 Long: -79.993	Ratio
Winter (DJF)	9.63	7.91	1.217
Spring (MAM)	8.15	6.56	1.242
Summer (JJA)	6.67	5.34	1.249
Fall (SON)	8.54	6.91	1.236
Range	6.67 – 9.63	5.34 – 7.91	

The reason for the large difference between the off shore and on shore wind velocities is due to a difference in the number of obstacles along the surface. Due to the development of buildings and trees on-shore, the wind velocity is greatly reduced. Furthermore, due to obstacles, the wind may actually be in the turbulent flow regime, leading to excessive wear and tear on the rotors. In the case of off-shore sites, the roughness is much lower than even flat land. This is why water surfaces have a roughness class of 0 and most industrial or developed property has a roughness class of 3 or 4 (Danish Wind Energy Association, 2003).

Though not pertinent in the selection of wind turbines at the Nanticoke site, generally, other aspects such as the tunnel and hill effect are usually considered when determining the optimal location for the construction of a wind turbine. However, the park effect (mutual interference between turbines) will be relevant in determining the number of wind turbines that could be developed in the region. This is due to the fact that once wind has passed through a wind turbine, it becomes turbulent. This will constrain the maximum number of wind turbines that can be developed both on-shore and off-shore.

2.7.3 Selection of Wind Turbines

There are several factors that determine the selection of an appropriate wind turbine. The primary aspects will be discussed here.

1. Load Considerations: Though it is generally true that a taller wind turbine will generate more electricity, it is not always favourable to opt for the largest one available. This is due to the fact that a large load is involved in the case of large rotors. Furthermore, the optimal size of a wind mill is determined by electricity costs and the velocity profile of the wind (Danish Wind Energy Association, 2003).
2. Number of Blades: Due to their popularity, upwind 3-blade systems will be considered in this report. However, there are several other types of wind turbines that have been developed including vertical axis wind turbines, and one or two rotor systems, but this technology is not suited for large scale rural applications due to lower efficiencies (Danish Wind Energy Association, 2003).
3. Betz's Law: This defines the upper limit of efficiency that can be achieved by a wind turbine. The efficiency is defined as the mechanical energy obtained divided by wind

energy that was available to the wind mill. Betz law dictates that the maximum efficiency that can be achieved is 58% (Danish Wind Energy Association, 2003).

4. Yaw Mechanism: This is the ability of a wind turbine to rotate in order to face into the wind and maximize the amount of energy that can be converted.
5. Rotor Blade Curvature: There is a difference in curvature between the root and the tip of the blade. The reasoning behind this design feature is that the velocity is different at different points of the blade. Though the wind velocity is the same, the magnitude of the axial velocity due to the rotation of the rotors increases with increasing distance from the centre of the turbine. The resultant vector of air is thus different at different points along the rotor.

2.7.4 Wind Turbines that are being considered for this work

In Ontario there are a number of wind power projects in various stages of development. Furthermore, based on AIM Powergen's website (Elliot, 2008) approximately 300 MW are to be considered in Nanticoke region for offshore developments, which would significantly increase wind power in Ontario as whole. Based on these constraints and preliminary design calculations and simulations, the number of wind turbines, size and height of wind turbines will be recommended in the final design.

It is important to note that in order to be successful; more wind data will be required to judge the appropriate height of the wind turbines. Based on preliminary research, it seems as though an off-shore wind mill of 60 m height may be sufficient due to the low roughness of water. However, further economic assessment and technological assessment would be required.

However, based on preliminary comparisons, the following wind turbines will be considered:

On-Shore

- Vestas V82;
- Vestas V70 Onshore; and
- GE 2.5 XL.

Off-Shore

- Vestas V66 2000/66 offshore;
- GE 1.5 SLE; and
- GE 3.6 MW.

In the case of wind turbines as wind energy is often greater at night than in the day, unlike electrical demand, hydrogen storage will be particularly useful. Therefore, the work will determine the best suited turbine model for off-shore and on-shore developments, and the number of each of them for maximizing available wind energy, considering geographical constraints, that can be included in the energy hub for producing electricity for peak demand using hydrogen storage.

2.8 Solar Energy:

Solar energy collects energy from sunlight either in the form of thermal energy or photo energy. Photovoltaic (PV) cells generate electric power when illuminated by sunlight or artificial light. Figure 18 outlines the anatomy of a crystalline-silicon solar cell. They contain a junction between two different materials across which there is a built in electric field. This region of electron activity is called the n-p junction. While the cell itself remains electrically neutral at equilibrium conditions, when light falls on these cells, the absorption of photons of energy greater than the band-gap energy of silicon promotes electrons from the valence band to the conduction band, thereby creating electron hole pairs resulting in positively charged and negatively charged regions. This leads to current flow. There are several types of PV cells. Table 6 outlines the various types of solar cells, and their constraints.

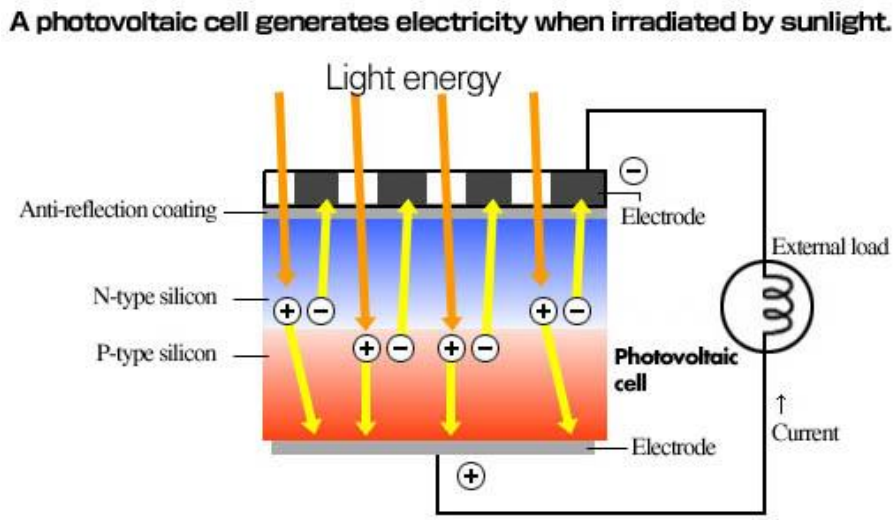

Figure 18: Operation of a Crystalline Silicon PV Cell (APEC Virtual Center, 2007)

Table 6: List of various types of PV Cells and their Uses (Archer & Barber, 2004)

Kind	Conversion Efficiency	Characteristics	Major applications
Single-crystal-silicon cell	14 – 17 %	Abundant records of use	Satellite use Power-generation use
Polycrystalline-silicon cell	12 – 15 %	Suitable for volume production in future	Power-generation use
Amorphous-silicon cell	8 – 9 %	Tends to deteriorate rapidly. Suitable for flexible products	Consumer-product use (Electric calculators, wristwatches, etc.)
Single-crystal-compound cell (GaAs)	12 – 15 %	Heavy and fragile	Satellite use
Polycrystalline-compound cell (CdS, CdTe, $CuInSe_2$, etc.)	18 – 21 %	Low material availability. Some materials contain environmental pollutants.	Consumer-product use

As observed, from the above table, single crystal silicon cell, and polycrystalline silicon cells are the only commercially viable PV technologies suitable for large scale power generation. Hence, these will be the options considered for this work.

Designing a PV System

Several factors need to be taken into consideration while designing a PV system. Not only must the cells be connected together into modules (arrays of cells) to provide appropriate current and voltage levels, but they must also be protected from environmental damage.

Cells are connected together in series to increase voltage, and in parallel to increase current. Concentrator systems are flat solar panels with a controller that is designed to track the sun's pathway from east to west. As a result, the flat solar panels tilt on a single axis to track the sun's path during the day. These have found to increase the energy output from solar panels by 30%. Two-axis tracking systems which can also move in the north-south direction have been found to further increase energy output by 20%. However, it must be noted that double axis tracking systems are only cost-efficient in regions with more than 3000 hours of sunshine per annum. Hence, single-axis concentrator systems are more suited to Ontario's climate.

While cloudy days and snowy days will significantly impact the amount of light absorbed by individual PV cells, it further impacts modules. If a shaded cell is connected to an unshaded cell in a module, the unshaded cell's performance will also be reduced. Hence, in these scenarios, it is important to have optimum interconnection of modules, use string or module inverters, and use protective devices such as blocking diodes. Furthermore, a snow cleaning mechanism will have to be installed to take advantage of sunlight in winter.

The performance of the module has its standard efficiency quoted at 25°C. The module voltage reduces with increasing temperature, and although current increases slightly, the overall effect is for the efficiency to reduce as temperature increases to the tune of 0.4 – 0.5% of their net energy output per degree increase for typical crystalline silicon cells (Archer & Barber, 2004).

The orientation of the module with respect to the direction of the sun determines the intensity of the sunlight falling on the module surface. Two parameters are used to describe this: tilt angle, which is the angle between the plane and the horizontal, and the azimuth angle, which is the angle between the plane of the module and due north. The optimum orientation will depend on the latitude of the site. For higher latitudes as in Ontario, the best tilt angle is the latitude angle minus 10 – 15 degrees.

Like most renewable energy sources, a key concern for PV-cells for on-grid applications is its intermittency. Currently stand-alone PV systems are connected to a battery which stores the energy till when it is used. These, while practical for small applications are very expensive for large-scale systems (Archer & Barber, 2004). Hence, in a larger scale clean energy hub storing energy in the form of hydrogen, which in-turn can be used either as fuel for transportation, or can be converted back to electricity using fuel cells, provides a much better and economic method of harnessing energy from the sun efficiently, while having the ability to provide energy on demand.

2.9 Biomass Options

"Biomass" refers to the totality of biological material that is used globally to generate energy. Biomass contains both materials that are waste or by-products of other biological process, such as forestry residues, agricultural residues and dung, and those that are grown specifically for the purpose of harvest and combustion to produce energy including wood fuel, liquid and solid bio-fuel crops. Such energy sources could become an important component in a future CO_2-neutral energy economy.

Current Technology Options

The chemical composition of dry biomass varies somewhat with species but is roughly 75% carbohydrates or sugars and 25% lignin, with the empirical formula $C_3H_4O_2$. The main carbohydrates are cellulose, a polymer of glucose and the single most abundant product of photosynthesis and hemicelluloses. Because of the oxygen content, biomass and bio-fuels have a much lower calorific value than conventional fuel oils. Biomass generally has low sulphur content and its nitrogen content depends on the protein content, which should be kept low to minimize the emission of NO_x on combustion (Archer & Barber, 2004). Table 7 demonstrates

the energy content (the energy released on combustion) of compounds; this is inversely related to the proportion of oxygen atoms in the molecular formula. Methane and other hydrocarbons that contain little or no oxygen have high energy contents.

Table 7: Energy Content of Selected Organic Compounds (Archer & Barber, 2004)

Compound	Basic Formula	Energy (MJ/kg)
Acetic acid	CH_3COOH	9.5
Glucose	$C_6H_{12}O_6$	13.3
Cellulose	$C_6H_{10}O_5$	15.2
Lignin	$C_6H_8O_4$	28.5
Turpentine	$C_6H_6O_3$	38.0
Methane	CH_4	47.5

Lingo-cellulosic compounds contain progressively greater amounts of energy as their structure becomes more complex. There are six principal conversion routes to generate energy in large-scale from biomass: direct combustion, gasification, pyrolysis, fermentation, oil extraction and anaerobic digestion. Combustion and gasification, however, are the most common and proven methods of generating energy from biomass.

Simple combustion systems are the most common method of obtaining energy from biomass, for the generation of heat or electricity through steam production. Conversion to electricity with this technology has particularly low conversion efficiencies; approximately 20 to 35%. However, the technology is reliable and proven and is therefore appropriate for immediate uptake and exploitation.

The gasification of biomass is used to produce ‘bio-gas’. This gasification process involves the conversion of biomass into a combustible gas mixture through initial combustion under through partial oxidation at temperatures of 800-1300°C. The main combustible components of the resultant gas predominately consists of H_2, CO and CO_2 which can be used for heating, electricity generation or converting to useful chemicals such as methanol. It can be used as a substitute fuel in oil-fired furnaces, boilers or internal combustion engines (Forsberg, 2009).

Gasification technologies for biomass are based on existing systems for coal and offer significant gains in efficiency for electricity generation.

Removing recyclable and non-combustible materials from municipal solid waste (MSW) results in an upgraded fuel known as refuse-derived fuel (RDF). RDF can be direct-fired or gasified alone or blended with other fuels to produce steam to generate electricity. Biomass using RFD emits less greenhouse gasses and NO_x, SO_x emissions compared to coal.

Toronto generates roughly 1.5 million tonnes of Municipal Solid Waste (MSW) every year. While 20% of this was diverted for recycling and other purposes, 80% or 1,163,000 tonnes of MSW were shipped to Michigan Landfills (City of Toronto, 2007). Now that Toronto is planning to stop shipping waste to Michigan, the waste must be disposed off in other ways. Generally, half of the garbage collected is non-combustible and must be separated. (Ontario Ministry of Energy, 2006) This leaves around 600,000 Tonnes of MSW from the greater Toronto area alone. On average, 1 tonne of MSW yields 0.7 Bone Dry Tonne (BDT) of RFD (Ontario Ministry of Energy, 2006). This gives us 380,000 BDT of RFD available for biomass power. This can potentially provide a substantial amount of power and can also help solve Toronto's garbage crisis.

Unutilized wood is also a biofuel and can come from a variety of locations. It could be a forest harvest residue, from mill waste or from other sources of wood waste. For Ontario, the annual allowable cut is roughly 32 million m^3 while 22 million m^3 is actually harvested. The 10 million m^3 gap represents the volume of round-wood not harvested within forest management units (FMU) and trees left standing within cutovers (Ontario Ministry of Energy, 2006). All of this 10 million m^3 can be potentially used as fuel for biomass. Figure 19 lists the future supply for Wood in Ontario.

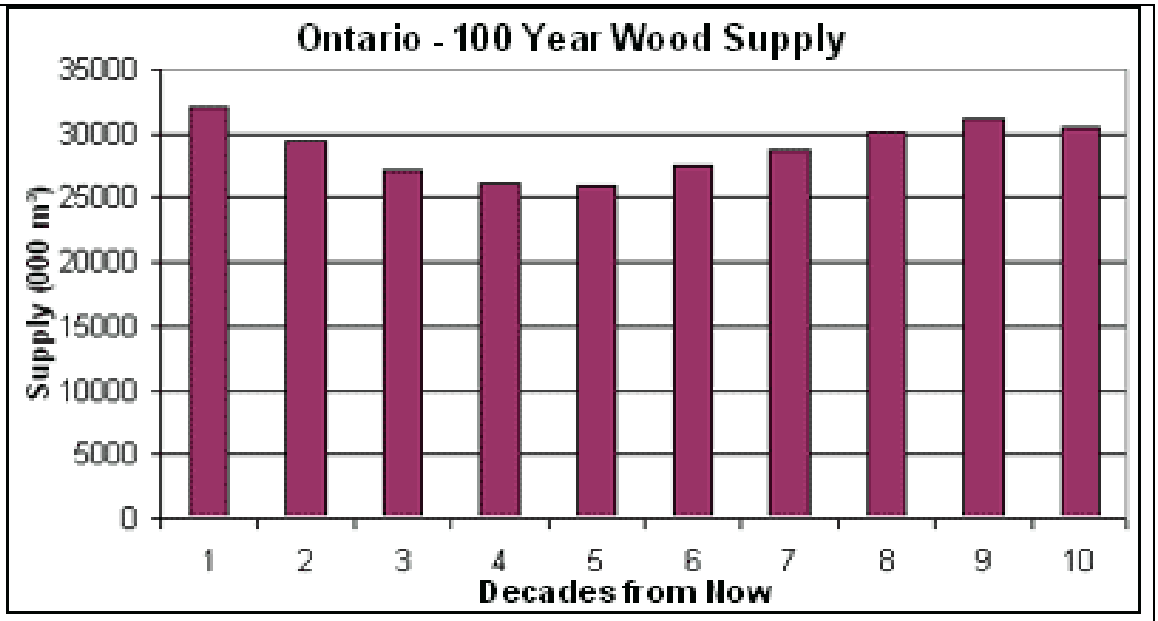

Figure 19: Supply of Wood in Ontario by the Decade (Ontario Ministry of Natural Resources, 2004)

As can be seen from the figure, there is no worry about a dwindling supply of wood for the foreseeable future of Ontario. Hence, wood waste can be used for a long time with no need for concern of diminishing supply. However, since transportation is expensive, only Southern Ontario's Wood Waste is being considered for this work.

Most of the forested regions in Southern Ontario are privately owned. Hence, there is no real data available on the exact amount of forest harvest residue available to be of use for the

Nanticoke hub. A practical pool of 238,000 BDT of tops and limbs that could be supplied each year from north western Ontario FMU's was obtained. This is based on an availability factor of 0.5 (Ontario Ministry of Energy, 2006). With this data, it is possible to estimate the amount of waste available from southern forests.

Based on the merchantable volume of roundwood harvested in Canada, approximately 78% of a typical sawlog is commoditized – 40% is sawn into dimensional lumber and 38% is chipped for pulp and paper production. The remaining 22% is the residue fraction and consists of bark, sawdust and shavings (Wood & Layzell, 2003). It is estimated that Ontario sawmills produce 1.53 million tonnes of wood residues, of which 1.08 million tonnes are burned as hog fuel, taken as feed stocks by the secondary wood products industry, or used for animal bedding by the livestock and poultry industries. Roughly 0.45 million tonnes remain unused (Ontario Ministry of Energy, 2006). The exact amount of wastes produced by each mill is not readily available. More research must be done in that area. Most of the bigger mills are in the northern region of Ontario. Only the ones in the southern region could be considered economical for transportation for the energy hub proposed for this work.

A technical option that is receiving widespread interest is the co-combustion and co-gasification of coal/wood mixture (e.g. with 20% of wood) in existing coal-fired gas stations. However, the major limitation to biomass co-firing is that biomass is difficult to pulverise in the manner used for coal in advanced systems, and biomass tends to produce fouling gases and slogging, which limits the enthusiasm of industry to take up this technology. Nevertheless, this is a very viable option for the Nanticoke site as it might prove to be a favourable option to replace coal for existing gas stations. However, continuation with the use of any coal is in contradiction with current government policy, and in contradiction with the objectives of a clean energy hub. Nevertheless, the continuation of co-firing of coal and biomass at limited times in the year, and a peak demand periods will certainly represent a realistic scenario and is considered in the analysis.

Renewable and biomass systems for large-scale energy generation are often relatively expensive. However, most renewable systems in industrialized countries are seeing a 10-15%

reduction in costs of operation year over year. Bio-fuel and electricity that are made from biomass are expensive compared with conventional alternatives, and their use generally needs to be stimulated by subsidy or regulation. Future cost improvements should come from volume production, the development of more efficient chemical processes, and the production of value-added chemicals.

The production of 1 GJ of energy from oil, coal, and natural gas results in the release of 73 kg, 91 kg, and 52 kg of CO_2 respectively. The benefit of biomass lies in the fact that growing vegetation will reabsorb the CO_2 released during combustion. As such, this study has made effort to include biomass in the energy generation mix, because it fits well with existing infrastructure, and provides a good 'peaking' generation source. Biomass is a diffuse resource, arising over very large areas, and thus requiring large land areas with substantial logistical problem in collection and transport as well as a high electricity generation cost. A power generation plants around 30-40 MW_e will require a planted area of around 100 km^2. A further complication with almost all forms of biomass is their seasonality; forestry and coppiced crops can only be harvested during the winter months, and the energy crops and agricultural residues are even more seasonal, typically only grown for a few months a year. There is also the related problem of storage and transport of the biomass which greatly affects the moisture content and as a result, energy content. Most of the land in Haldimand County is heavily textured clay that requires extensive drainage (McSweeney & Associates, 2009). A wide variety of fruits and vegetables grow here. Livestock include beef cattle, dairy cows, poultry, pork, ostrich and emu. Traditional and specialty crops are also found here.

Haldimand County has a lot of farm, fallow land and pasture that can supply biomass resource for electricity generation. Table 8 provides a summary of land use in Nanticoke region. Therefore, while there is some limited potential for energy crops in the region it is beyond the scope of this project to conduct a detailed analysis of this energy source.

Table 8: Land Use in Nanticoke Region (McSweeney & Associates, 2009)

	Farms Reporting	Acres	Hectares
Total area of farms	951	222,396	90,000
Summer fallow land	63	1,152	466
Land crops (excluding Christmas trees)	842	179,365	72,586
Tame or seeded pasture	293	8,273	3,348
Nature land for pasture	297	7,673	3,105
All other land (including Christmas trees)	78	25,933	10,495

2.10 Environmental Benefits

Pollution from a Coal Plant

The principal objective of this work is to develop a model for a conceptual design of a clean energy hub to replace the coal fired generation facility. Accordingly, the main environmental goal is to eliminate pollutant emissions. There are several environmental pollutants generated by coal-fired power plants. Table 9 summarizes the annual production of each of these pollutants from the Nanticoke Coal Power Plant (Environment Canada, 2007).

Table 9: Emissions per MW produced by Nanticoke Power Plant

Substance	Tonnes (2007)	Average MW Generation in 2007	kg/Year-MW
Sulphur dioxide	67,423	2,081	32392.25
Carbon monoxide (Transforms to Carbon dioxide)	6,890	2,081	3310.18
Oxides of nitrogen (expressed as NO2)	22,376	2,081	10750.17
Volatile Organic Compounds (VOCs)	47	2,081	22.58
PM - Total Particulate Matter	4,235	2,081	2034.63

PM10 - Particulate Matter <= 10 Microns	1,737	2,081	834.51
PM2.5 - Particulate Matter <= 2.5 Microns	609	2,081	292.58
Dioxins and furans - total	0.174	2,081	0.084
Arsenic (and its compounds)	0.723	2,081	0.347
Other Heavy Metals (Cobalt, Copper, Chromium and its compounds)	8.988	2,081	4.318
Lead (and its compounds)	0.681	2,081	0.327
Mercury (and its compounds)	0.152	2,081	0.073
Cadmium (and its compounds)	0.023	2,081	0.011
Hydrochloric acid	1,495	2,081	718.25
Aluminium (fume or dust)	0.385	2,081	0.185
Hydrogen fluoride	252	2,081	121.07

Effects of Sulphur oxides

Sulphur dioxide can cause respiratory problems in humans and animals and can damage vegetation. Based on information provided in MSDS sheets, sulphur dioxide is an irritant and corrosive to eyes and skin. Furthermore, it has found to be a mutagen and has caused reproductive toxicity and developmental changes in newborn test animals. Once sulphur dioxide combines with water to form acid rain, further harmful effects to vegetation, buildings, and vegetation can result. Ecosystems will also be altered by acidification.

Effects of Carbon monoxide

Carbon monoxide is formed as a result of incomplete combustion of coal in power plants. It is a poisonous compound that combines with haemoglobin in blood resulting in a decreased capacity of carrying oxygen to lungs and tissues. It can lead to impairing exercise activity,

visual perception, manual dexterity, learning functions, and the ability to perform complex tasks (Environment Canada, 2006). Depending on level of exposure, heart palpitations, convulsions, nausea and even death can occur. Some experimental evidence also indicates reproductive and teratogenic (deformity in newborns) effects. In the environment, carbon monoxide further reacts with oxygen to form carbon dioxide, which has a significant impact on global warming.

Effects of Nitrogen oxides

Nitrogen oxides pose health and environmental complications similar to sulphur dioxide. In its uncombined state, it has adverse effects on the respiratory systems of humans and animals. Furthermore, nitrous oxide can also damage vegetation. Based on MSDS sheets, the inhalation of nitrous oxide has moderate effects ranging from nausea to eventual unconsciousness depending on the oxygen present (Baird & Cann, 2005, pp. 76-79). When combined with water, like sulphur oxide, an acid results that can damage vegetation, buildings, vegetation, and acidify ecosystems. In the environment, nitrogen oxides contribute heavily to mid-afternoon ozone formation, often observed as a hazy fog around noon, thereby leading to poor air quality, and respiratory problems. Atmospheric ozone harms primarily young children and the elderly by worsening existing conditions of asthma, and bronchitis respectively. In a healthy population, ozone chronically reduces lung function.

Effects of Volatile Organic Compounds

The emission of Volatile Organic Compounds (VOCs) such as benzene and toluene can have toxic effects on humans ranging from causing cancer to being neuro-toxic. Hydrocarbon VOCs are major contributors to smog once they combine with nitrous oxides. In addition, they significantly contribute to increasing residence times for methane, which enhances global warming effects (Environment Canada, 2006).

Effects of Particulate Matter

In addition to the harmful effects of the above emissions, the production of particulate matter of different diameters (2.5 and 10 microns) is also a matter of concern for human health. This is because they have led to cardiac and respiratory diseases such as asthma, bronchitis, and

emphysema (Baird & Cann, 2005, pp. 116-117). Particulate matter is released through emissions from smokestacks and is formed by the reaction of sulfur and nitrogen oxides and ammonia to form sulphates, nitrates and particulate matter.

Heavy Metal Poisoning

Heavy metals such as mercury, lead, cadmium, chromium, and arsenic are highly toxic as cations, especially when bonded to chains of carbon atoms. Mercury vapour causes extensive damage in kidney and liver. High mercury concentration results in dysfunctions of the central nervous system. Lead poisoning causes irreversible neurological damage as well as renal disease, cardiovascular effects, and reproductive toxicity. Chromium is considered carcinogenic, and arsenic prevents production of essential metabolic enzymes leading to multiple organ failures in humans.

Switching to alternative non-fossil based technologies can reduce if not eliminate most of these pollutants. Hence, this project will develop a model to measure the reduction of environmental pollutants and toxic materials when switching to non-fossil energy sources. Although some emissions will come from the bio-mass energy generation, an objective of this work is that the clean energy hub will eliminate all of these emissions through the use of nuclear and renewable energy sources.

Chapter 3 Model Development

3.1 Introduction:

A model of a clean energy hub was constructed in Matlab/Simulink. Screenshots of the program can be found in Appendix A. Sample input data can be found in Appendices B through E, and sample output data can be found in Section 4.1.

Figure 20 outlines the schematic of the proposed energy hub. As observed, the two products from this hub are electricity and hydrogen. Hydrogen can be stored in either tanks or underground mined caverns. Table 10 outlines the potential uses of the above products.

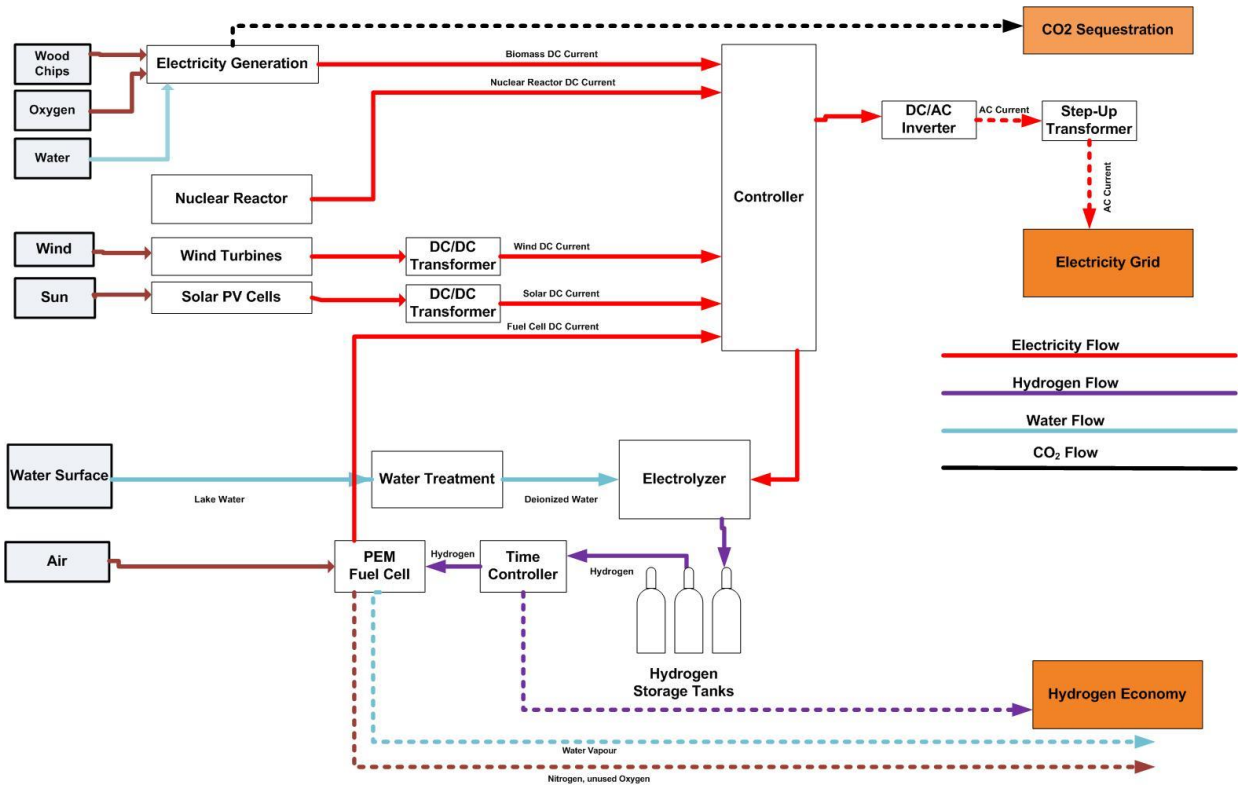

Figure 20: Proposed Energy Hub in Nanticoke

Table 10: Energy Supply, Transportation, and Demand Options Considered for Nanticoke

Energy Source	**Renewable**					**Nuclear**		
	Wind		Solar	Biomass				
	Off-Shore	On-Shore	PV Cells	Organic Waste	Energy Crops			
Transformation and Transport	**Electrical Grid**			**H_2 Options**				
	Existing	New		Electrolysis		High Temperature Electrolysis		
H_2 Distribution				**Pipelines**	**Rail**	**Truck**	**Distributed Supply**	
Potential Demand	**Electrical**		**Hydrogen Demand**					
	Regional Population Growth	Current Grid	Regional Industrial	Future Hydrogen Economy				Peak Electricity Generation
		4000 MW Coal	Chemical Plants	Rail	Industrial in-house	Vehicle		Using PEM Fuel Cells
					Forklifts	Regional Demo Fleet	Ontario Vehicle Demand	

A model has been developed for energy supply and demand in the Nanticoke region using Matlab/Simulink. Electricity demand profile, wind profile, and insolation profile for years 2007 and 2008 in the region are used to predict future supply and demand profiles for electricity and renewable energy sources, and the following models will be delivered. The model produces values for the following based on data from past years and references.

Electricity Generation is calculated from:

- Electricity generated from nuclear reactors every hour;
- Electricity generated from off-shore 2 MW wind turbines every hour;
- Electricity generated from on-shore 1.5 MW wind turbines every hour;
- Peak electricity that can be generated from biomass gasification plant every hour;
- Electricity generated from roof-top solar panels in W/m^2 every hour;
- Electricity generated from on-ground solar panels in W/m^2 every hour; and,
- Peak electricity that can be generated from PEM fuel cells every hour;

Electricity Demand is based on hourly electricity demand from the Nanticoke grid based on requirements for years 2007 and 2008.

Hydrogen Demand is estimated from:

- Hourly hydrogen demand for transportation, i.e., cars, trucks, buses, forklifts (in kg);
- Hourly hydrogen demand for chemical/industrial production (in kg); and,
- Hourly hydrogen demand for electricity production (in kg).

Hydrogen Storage at any given time is calculated by:

- Hourly amount of hydrogen generated by electrolyzers when surplus electricity is generated during off-peak hours (in kg);
- Hourly amount of hydrogen consumed by fuel cells to produce electricity during peak demand (in kg);
- Hourly amount of hydrogen consumed for meeting non-electricity hydrogen demands (in kg);
- Net amount of hydrogen storage for every hour (in kg);
- Number of hydrogen storage tanks needed for peak storage (if stored above ground); and,
- Maximum underground hydrogen storage capacity (mined caverns) (in kg).

Environmental Benefits and Costs

- Amount of CO_2 sequestered by using nuclear, solar, wind, and biomass technologies (in kg per year);
- Amount of carbon monoxide, sulphur oxides, $PM_{2.5}$, PM_{10}, CO, nitrous oxides, arsenic, aluminium, cadmium, hydrogen fluoride, and hydrochloric acid production that can be reduced by switching from coal to nuclear and renewable sources of electricity (in kg per year);
- Amount of CO_2, and CO sequestered by using renewable hydrogen compared to hydrogen from natural gas for transportation and chemical industries; and,
- Amount of nitrous oxides reduced by switching to fuel cell technologies for the transportation industry.

Costs and revenues are calculated based on the following values:

- Revenues from electricity sale based on hourly electricity price data from IESO ($/hr);
- Revenues from hydrogen sale for electricity production, and for transportation and chemical industries ($/kg);
- Revenues from emissions averted while producing electricity from clean sources ($/yr);
- Revenues from emissions averted while switching to clean hydrogen from gasoline for transportation ($/yr);
- Revenues from emissions averted while obtaining hydrogen through electrolysis instead of steam reforming for industry ($/yr);
- Daily capital cost depreciation over 60 years for nuclear reactors ($/day) which will be averaged over 24 hours to get $/hr;
- Daily operating & maintenance cost of nuclear reactors averaged over 24 hours to get $/hr;
- Nuclear reactor radioactive waste disposal costs (in $/hr);
- Daily capital cost depreciation over 20 years for on-shore wind turbines, off-shore wind turbines, and solar panels averaged over 24 hours to get $/hr;
- Daily operating and maintenance cost for wind turbines, and solar panels averaged over 24 hours to get $/hr;
- Daily capital cost depreciation over 40 years for biomass gasification plant averaged over 24 hours to get $/hr;
- Daily operating and maintenance cost for the biomass gasification plant averaged over 24 hours to get $/hr;
- Electrolyzer capital, operating, and maintenance cost in $/yr;
- Fuel cell capital, operating, and maintenance cost in $/yr;
- Hydrogen tank capital, operating, and maintenance cost in $/kg;
- Underground hydrogen storage cost in $/kg;
- Cost of nuclear, wind, solar, biomass, electrolyzer, fuel cell, and storage each in $ / MWh;
- Total cost of energy hub in $ / MWh; and,
- Net annual profit/loss for the energy hub.

3.2 Model Logic:

3.2.1 Wind Model

Figure 21 outlines the process flow diagram used to obtain the total power from wind turbines. Detailed code for the wind model is outlined in Appendix A. Hourly power supply from Erie Shores Wind Farm was obtained from Independent Electricity System Operator (IESO) from Jan 1, 2007 till May 31, 2009 to obtain the average hourly power output. Erie Shores Wind Farm is located in Port Burwell, Ontario, about 75 kilometres west of Nanticoke, Ontario. The farm consists of 66 - 1.5 MW GE wind turbines and are located on-shore facing Lake Erie. This allows for a more accurate representation of the expected power output for turbines located on-shore in the Nanticoke region, given wind speeds along the shore are very similar. Data for the wind power is located in Appendix D. The total hourly power obtained from the farm was divided by 66 to obtain the approximate hourly power output per 1.5 MW GE turbine.

While on-shore data was readily available, off-shore data was comparatively more difficult to obtain, particularly, data which could be compared with on-shore data for a specified region. Figure 22 outlines the average normalized hourly wind power expected from on-shore wind turbines. Figure 23 outlines the average hourly wind speeds from off-shore turbines at Eureka Wind Park in California, US. Table 11 provides an analysis of off-shore and on-shore wind speed in Nanticoke, Ontario. Based on this information, it was observed that while there the range for both off-shore and on-shore wind speeds are similar, off-shore wind speeds are considerably higher, and as a consequence can generate more power. Therefore, the On-Shore to Off-Shore converter function uses the ratios outlined in Table 11 to convert on-shore wind power output to off-shore power output depending on season, and the peak check function ensures that the resultant off-shore wind power does not exceed the peak capacity of off-shore wind turbines. Since wind turbines produce electricity as alternating current (AC) at 690 V, and the power transmission lines supply electricity at 500 kV, a step up AC/AC transformer is needed to increase the voltage to 500 kV with a power efficiency of 98% (Consortium for Energy Efficiency, 2000).

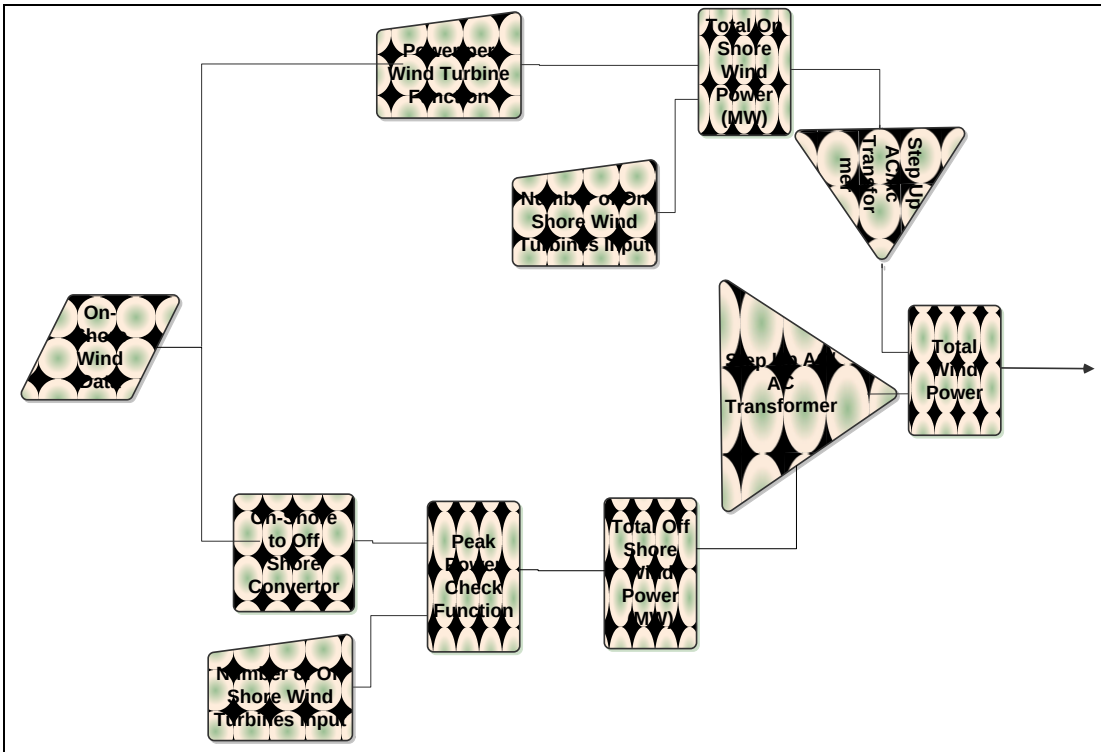

Figure 21: Wind Power Output Process Flow Diagram

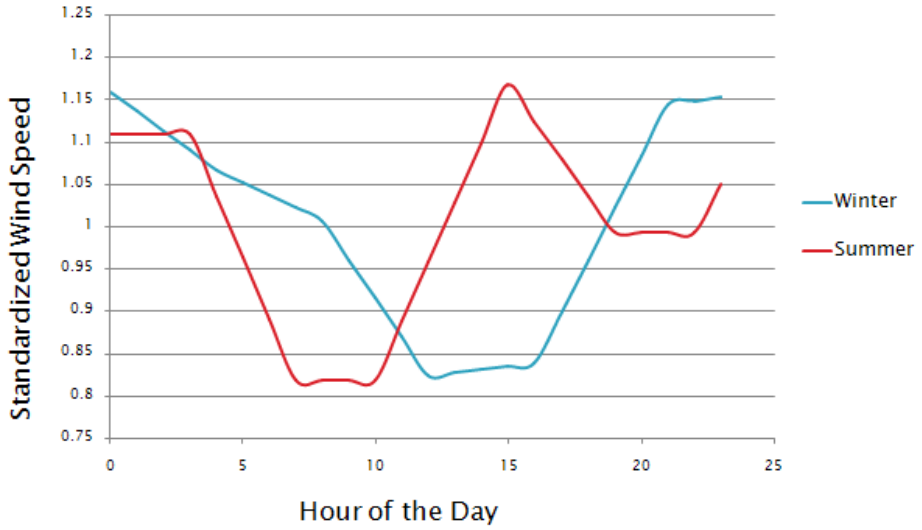

Figure 22: Daily Wind Load Profiles for Peak Summer and Winter days (Zandt, 2006)

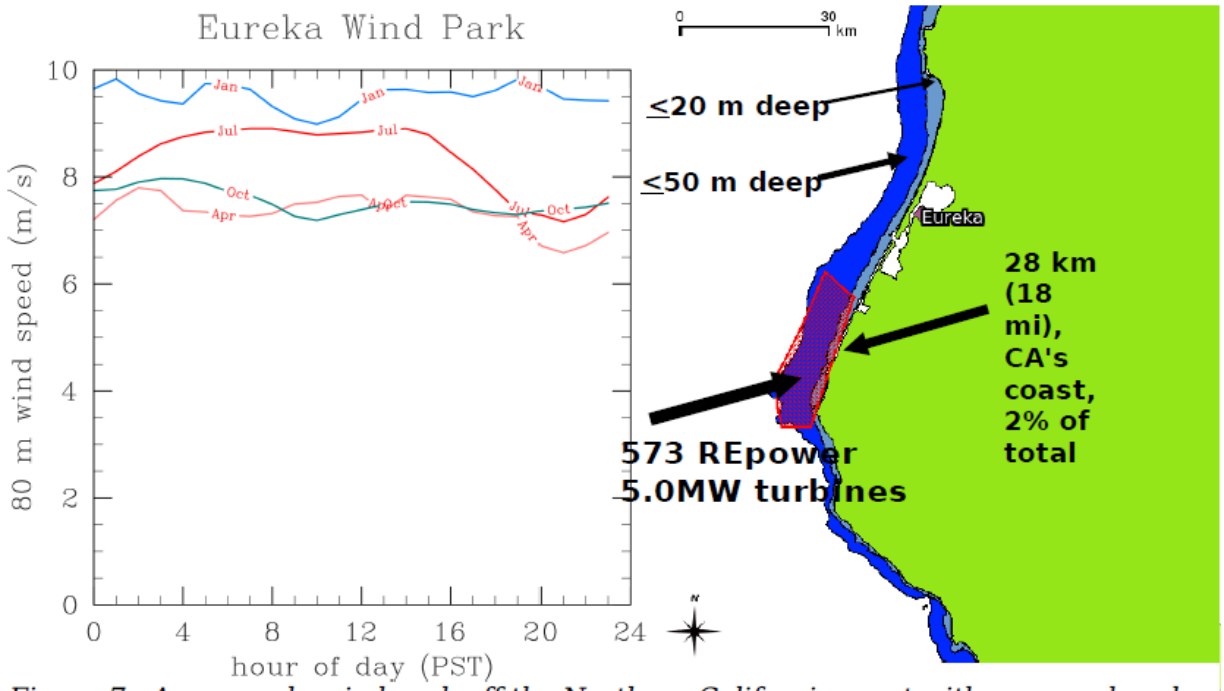

Figure 7: An example wind park off the Northern California coast with average hourly (PST) wind speeds shown on the graph. The winds at 80 m blow continuously throughout the day, most importantly at peak electricity demand times.

Figure 23: Daily Wind Speed Profiles for an Off-Shore Wind Farm: Eureka Wind Park, California (Dvorak et al., 2007)

Table 11: Comparison of Off-Shore vs. On-Shore Wind Speeds in Nanticoke, Ontario (Government of Ontario, 2008)

Period	Off-Shore Avg Wind Speed in m/s (80 m) Lat: 42.588 Long: - 80.209	On-Shore Avg Wind Speed in m/s (80 m) Lat: 42.788 Long: -79.993	Ratio
Winter (DJF)	9.63	7.91	1.217
Spring (MAM)	8.15	6.56	1.242
Summer (JJA)	6.67	5.34	1.249
Fall (SON)	8.54	6.91	1.236
Range	6.67 – 9.63	5.34 – 7.91	

Figure 24 outlines the process flow diagram for the total yearly cost of wind turbines. Based on costs provided by the Danish Wind Energy Association (Danish Wind Energy Association, 2003) the operating and maintenance cost for both off-shore and on-shore wind turbines were estimated to be US $ 0.01 per kWh energy produced by wind. The total installed capital cost for on-shore turbines was estimated to be US $ 2,750,000 per MW capacity, and their life span was estimated at 20 years. The installed capital cost for a 1.5 MW off-shore wind turbine was estimated to be 17,460,000 DKK, which at an exchange rate of 5.346 DKK per $ US, gives US $ 3,266,000 per 1.5 MW off-shore turbine capacity. Since 1.5 MW GE SLE turbines are currently being used for on-shore wind turbines, and 2 MW Vestas Off-Shore turbines are being considered for future off-shore wind projects in Ontario, these were chosen to estimate the total costs for wind energy. The equations are as follows:

$$Total\ Annual\ Installed\ Cap\ Cost\ (Offshore)\ (\frac{Can\$}{yr}) = \frac{\frac{2\ MW\ cap}{1.5\ MW\ cap} * 3266000 \frac{(US\$)}{0.9\left(\frac{Can\$}{US\$}\right)} * number\ of\ turbines * 1.05^{20*0.46}}{20} yrs \quad (1)$$

$$Total\ Annual\ Installed\ Cap\ Cost\ (Onshore)(\frac{Can\$}{yr}) = \frac{\frac{1.5\ MW\ cap}{1\ MW\ cap} * 2750000 \frac{(US\$)}{0.9\left(\frac{Can\$}{US\$}\right)} * number\ of\ turbines * 1.05^{20*0.46}}{20} \quad (2)$$

$$Operating\ and\ Maintenance\ Cost\ for\ both\ Onshore\ and\ OffShore\ \left(\frac{Can\$}{yr}\right) \tag{3}$$

$$= 0.01\frac{\frac{US\$}{kWh}}{0.9\left(\frac{Can\$}{US\$}\right)} * 1000\frac{kWh}{MWh}$$

$$* Total\ WindEnergyProduced\ (MWh/yr)$$

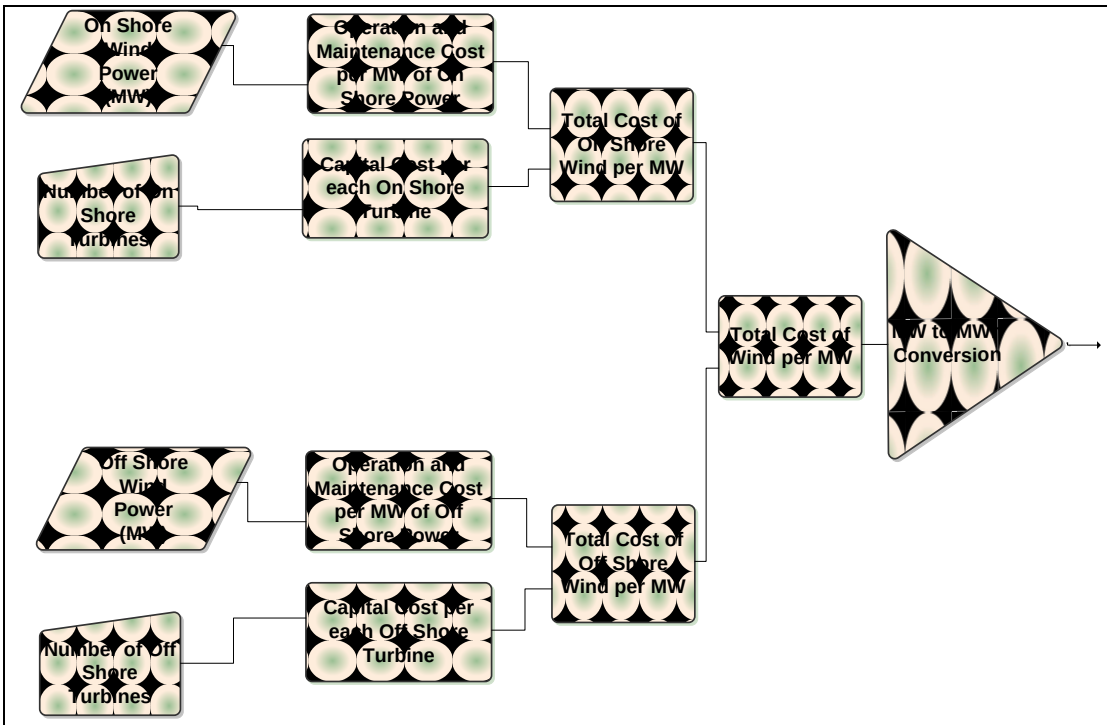

Figure 24: Process Flow Diagram for Determining Total Yearly Cost of Wind Power

Table 12 provides a summary of all the parameters obtained and used for estimating the power output and annual costs of a wind power plant.

Table 12: Summary of all Parameters obtained for Estimating the Total Cost of a Wind Power Plant

Parameter	Value	Source
Hourly On-Shore Wind Power Output		(IESO, 2009)
Transformer Efficiency	98%	(Commercial and Industrial Transformers Initiative, 2000, p. 11)
Winter Onshore to Offshore Power factor	1.217446	(Environment Canada, 2003)
Spring Onshore to Offshore Power factor	1.242378	(Environment Canada, 2003)
Summer Onshore to Offshore Power factor	1.249064	(Environment Canada, 2003)
Fall Onshore to Offshore Power factor	1.235890	(Environment Canada, 2003)
Onshore Wind Turbine Installed Capital Cost	US$ 2,750,000 / MW	(Danish Wind Energy Association, 2003)
Offshore Wind Turbine Installed Capital Cost	17,460,000 DKK / 1.5 MW	(Danish Wind Energy Association, 2003)
Operating and Maintenance Cost for both Offshore and Onshore Turbines	US$ 0.01 / kWh energy generated	(Danish Wind Energy Association, 2003)
Operating Life for Offshore and Onshore Wind Turbines	20 years	(Danish Wind Energy Association, 2003)
Onshore Wind Voltage	690 V	(GE- 1.5 MW Wind Turbines Technical Specifications, 2009)
Offshore Wind Voltage	690 V	(Vestas Wind Systems A/S, 2009)
Transformer Cost	Assumed negligible compared to turbine costs	

3.2.2 Solar Model

Solar energy in MW per m^2 can be determined by obtaining the average insolation per day (the total amount of solar energy available in kWh per m^2), the sunrise time, local noon time (the time of the day at which the solar radiation is at its peak), the sunset time, maximum temperature for the day, and minimum temperature for the day. Daily insolation data for Nanticoke, Ontario was collected from NASA Atmospheric Science Data Centre (Kusterer, 2009). It was observed that the daily insolation consists of two factors: the daily top of atmosphere insolation, which is the energy intensity of the sun's radiation before it reaches the atmosphere, and the insolation clearness index, which takes into consideration cloudiness, wind, and other factors which absorb part of the initial solar energy to reduce the daily insolation reaching the ground. Hence, the net insolation reaching the ground is obtained from the following equation,

$$Top\ of\ atmosphere\ insolation * insolation\ clearness\ index = net\ insolation\ on\ ground \quad (4)$$

Insolation data was collected for years 1999 through 2005, and their daily averages were obtained. Figure 25 outlines the yearly average insolation curve at the top of the atmosphere. Figure 26 outlines the yearly average insolation clearness index. Figure 27 outlines the average on-ground daily solar insolation.

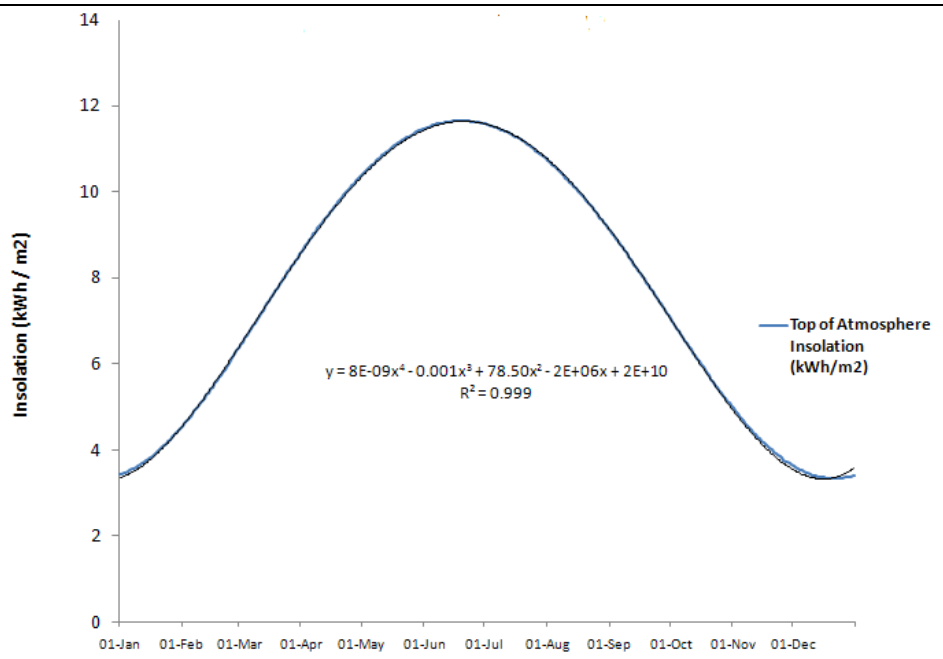

Figure 25: Average Top of Atmosphere Solar Insolation Curve

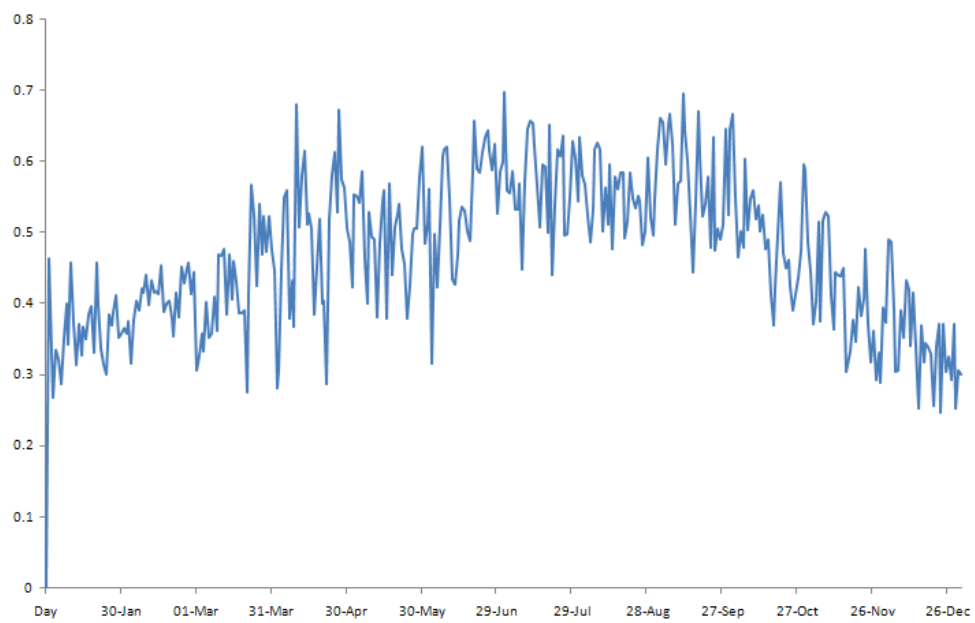

Figure 26: Average Insolation Clearness Index Curve

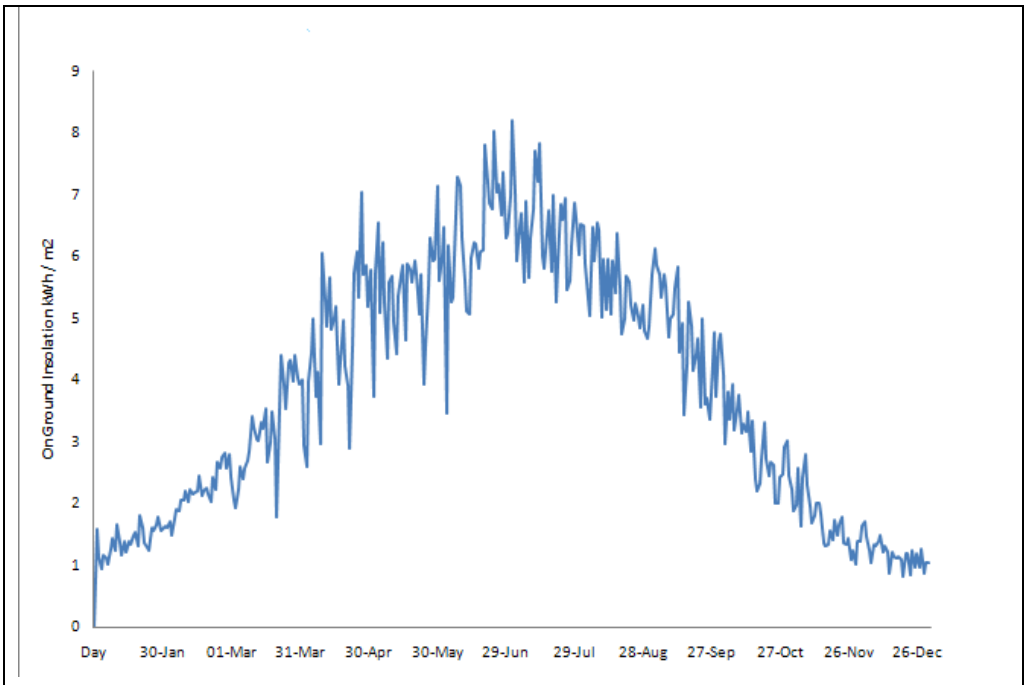

Figure 27: Average On-Ground Solar Insolation for Nanticoke, Ontario

Once the average daily on-ground insolation is obtained, the minimum and maximum daily temperature, and daily sunrise, noon, and sunset times are used to determine the hourly solar insolation in kWh per m^2. Data for sunrise, noon, and sunset was obtained for Hamilton, Ontario using the Sunrise-Sunset Calculator at National Research Council Canada website (National Research Council Canada, 2008). Data for daily minimum and maximum temperatures were collected from NASA Atmospheric Science Data Centre (Kusterer, 2009) for the years 1999 through 2005, and the average daily minimum and maximum temperature was calculated. Figure 28 and Figure 29 outline the expected hourly solar insolation and temperature profile. It was assumed that the hourly solar insolation curve is similar to a parabola with insolation equalling 0 at sunrise and sunset, and reaching a peak at noon. Therefore, the hourly on-ground insolation was produced by normalizing the curve such that the sum of the hourly on-ground insolation points was equal to the average daily on-ground solar insolation obtained. The hourly insolation points were then divided by 1000 to obtain insolation in MWh per m^2. The hourly temperature was expected to be the daily minimum at sunrise, and at the daily maximum 2 hours before sunset.

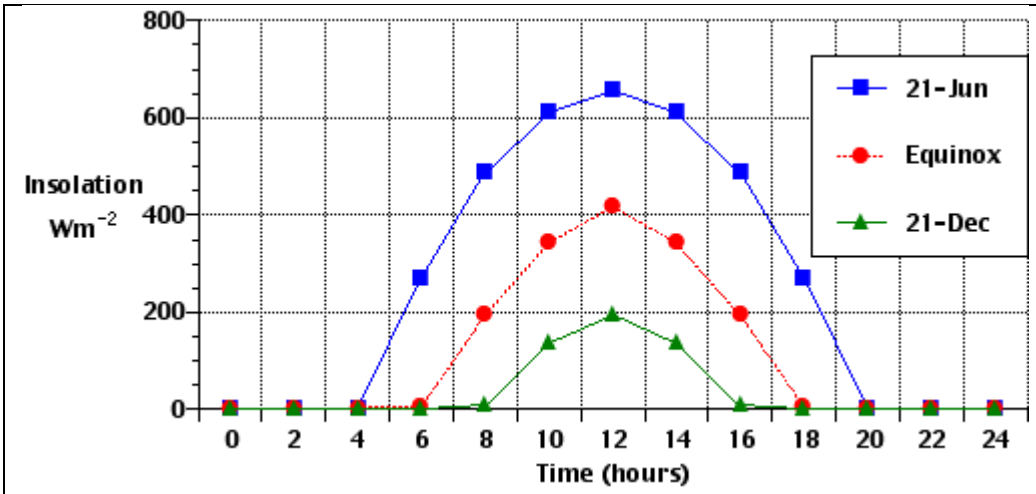

Figure 28: Hourly variations in insolation received for a location at 45° North latitude over a 24 hour period (Pidwirny, 2007)

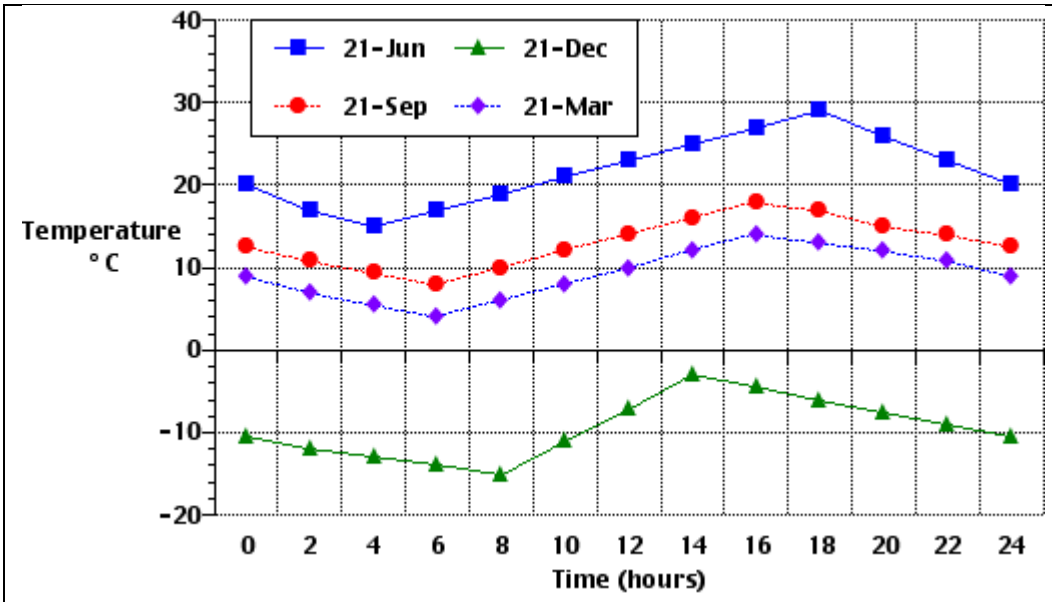

Figure 29: Hourly variations in surface temperature for a location at 45° North latitude over a 24 hour period (Pidwirny, 2007)

The hourly temperature data, the hourly on-ground solar insolation, and the area of the PV cells in m^2, are used to determine the hourly electricity generated from solar panels. Figure 30 outlines the process flow diagram for calculation of power from solar panels. Detailed code for

solar system calculations can be obtained from Appendix A. Since the panel, Suntech STP-210-18Ub was found to be the most economical PV system available in market, specifications for this system was obtained to model the PV system. The temperature efficiency function determines the drop or increase in efficiency for PV cells due to temperature effects. The nominal operating cell temperature (NOCT) for this system is 45°C, and is measured when the atmospheric temperature is 25°C. However, NOCT changes based on insolation, and atmospheric temperature according to the following equation:

$$Cell\ operating\ temperature\ (C) = \frac{(NOCT - 20)\ (C)}{HourlyInsolation\left(\frac{MW}{m^2}\right)} * \left(80\ \left(\frac{mW}{cm^2}\right) * (10^{-9})\left(\frac{MW}{mW}\right)\right) + Atmospheric\ Temperature\ (°C) \quad (5)$$

If the resultant cell operating temperature is greater than 85°C or less than – 40 C, the cells will not operate due to very low efficiencies. If the incoming solar insolation, in kWh / m^2, is less than 1 kWh, the cells will not operate due to lack of sufficient energy. If the cell temperature does not meet either of the above conditions, then, depending on the cell temperature, the temperature efficiency drops the cell efficiency by 0.48% for every degree C the cell temperature is above or below the nominal operating cell temperature (45°C). Solar poly-crystalline PV cells are expected to be 13.6 % energy efficient. Since the current output is in the form of direct current (DC), an inverter is needed to convert direct current (DC) to alternating current (DC), as required by power transmission lines. Inverters have an efficiency of 95% (Navigent Consulting, 2006). Likewise, since, the maximum system voltage for the stack is rated at 1 kV, a step-up transformer is needed to increase the voltage from 1 kV to 500 kV. These transformers typically have an efficiency of 99% (Commercial and Industrial Transformers Initiative, 2000). The total power output from solar panels is calculated as follows:

$$Total\ Hourly\ Energy\ Output\ (MWh) = Hourly\ Insolation\ energy\left(\frac{MWh}{m^2}\right) * Temperature\ efficiency * Cell\ efficiency * Inverter\ efficiency * Transformer\ efficiency * Area\ Covered\ by\ Solar\ PV\ Panels\ (m^2) \quad (6)$$

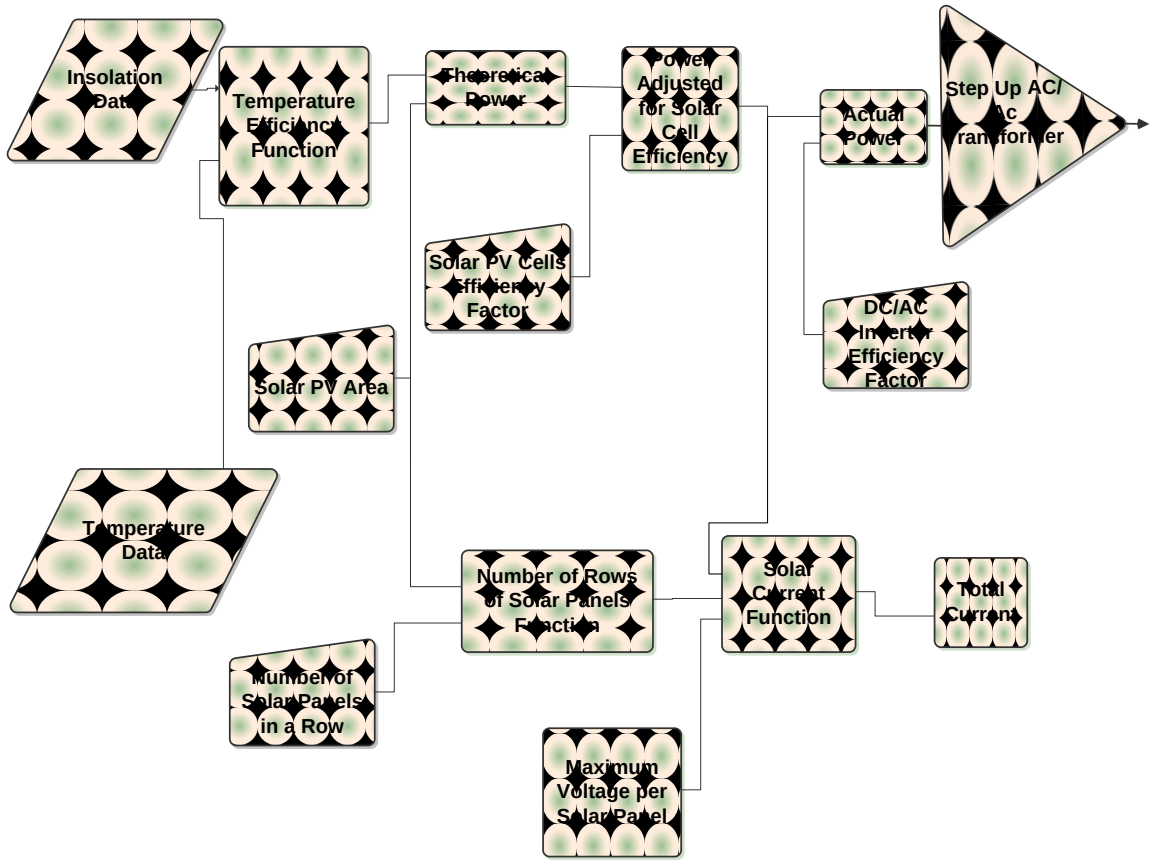

Figure 30: Process Flow Diagram for Solar Panels

Table 13 outlines the capital cost for PV cells in $ per W obtained for similar single crystalline silicon PV systems. While BP Solar and Suntech were very similar in prices, Suntech was chosen primarily due to the proximity of the installers to Nanticoke, thereby fostering local economy. Figure 31 outlines the process flow diagram for determining the annual cost of solar panels.

Table 13: Price per Watt of Similar Poly-Crystalline Si PV Cells (OY Not LLC, 2009)

Brand	Description	SKU	Price / Watt
BP Solar	SX 3200B 200 Watt (Price Per Pallet of 20 PCS)	KU10232	US$ 3.47
Suntech	STP 210-18/UB-1 210 Watt (Price Per Pallet of 26 PCS)	KU10254	US$ 3.54
Sanyo	HIP-195BA19 195 Watt HIT Power Solar Module	140016	US$ 4.91
Sharp	ND-208U1F 208 Watt Solar Module	135208SH	US$ 4.13
Sunwize	SW180 180 Watt Solar Module 36.60Vmp	103180SW180	US$ 4.19

Based on the above table, the cost for a 200 W solar module is US $ 708 per module. Given the quantity required, it is assumed that transportation and installation costs will be covered by discounts. It was noted that if land and installation costs are ignored, the PV module makes up for 75% of the total installed capital cost, with other components making up for 25% of the cost (United Nations Environment Program, 2002). Therefore, assuming a real interest rate of 5%, and a lifespan of 25 years, as outlined by Suntech Power, the annual capital cost can be calculated as follows:

$$Total\ Yearly\ Capital\ Cost\ for\ PV\ System\ (Can\$\ Per\ yr) \tag{7}$$

$$= \frac{\#\ of\ rows\ per\ stack * \#\ of\ stacks\ per\ module * Cost\ Per\ module\ (US\$) * \frac{1}{0.9\left(\frac{US\$}{Can\$}\right)} * \left(\frac{1}{0.75}\right) * 1.05^{25*0.46}}{25\ yrs}$$

Based on a case study in Germany, the yearly operating and maintenance cost for a 925 kW solar plant was 15300 Euros (Natural Resources Canada, 2009). Therefore, the operating and maintenance cost is calculated as follows:

$$Yearly\ Solar\ PV\ Operating\ and\ Maintenance\ cost\ \left(\frac{Can\$}{yr}\right) \tag{8}$$

$$= \frac{Total\ Solar\ Installed\ Capacity\ in\ MW}{\left(0.925\ (MW)\right)} * 15300\ \left(\frac{Euro}{yr}\right)$$

$$* (1.58) * \left(\frac{Can\$}{Euro}\right)$$

Since solar inverters cost Can $ 0.70 per watt and only last 5 years (Navigent Consulting, 2006) the yearly inverter cost is expected to be the following:

$$Total\ Yearly\ Inverter\ Cost\ \left(\frac{Can\$}{yr}\right) \tag{9}$$

$$= \frac{0.7\ \left(\frac{Can\$}{W}\right) * 1000000\left(\frac{MW}{W}\right) * Solar\ Panel\ MW\ capacity * 5 * (1.05^{0.46})}{5} yrs$$

Hence total yearly solar panel cost consists of the yearly capital cost, operating and maintenance cost, and inverter cost.

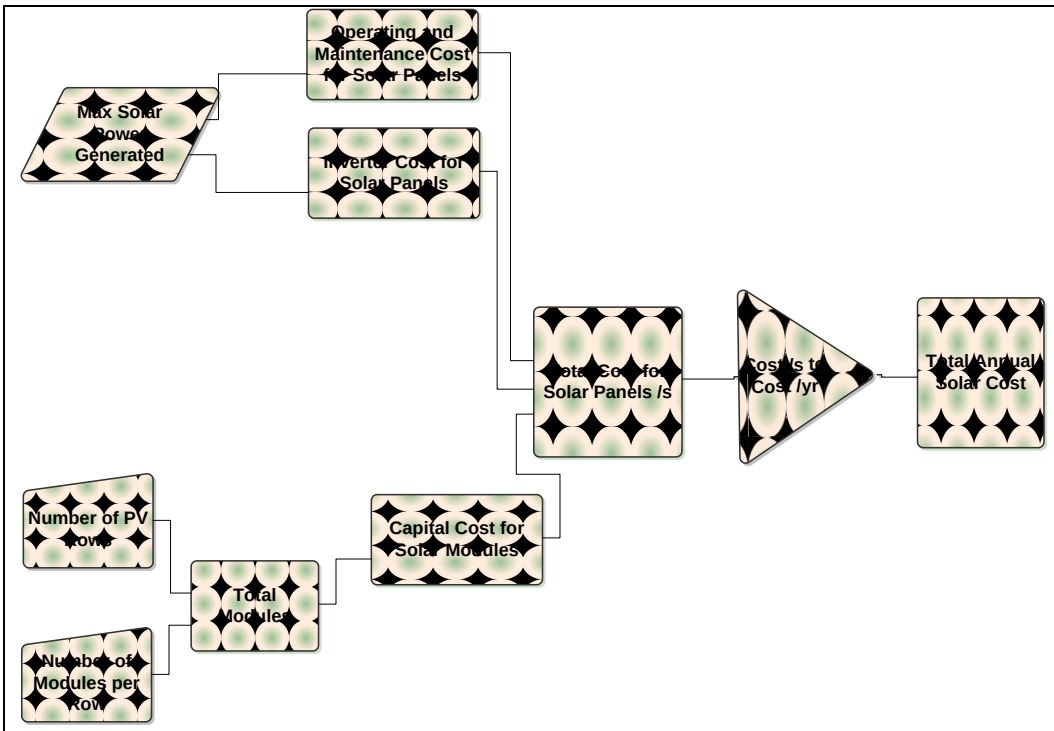

Figure 31: Process Flow Diagram for Calculating Total Solar Power Cost

Table 14 outlines the summary of all the parameters used for building the solar model.

Table 14: Summary of all Parameters used in Solar PV Model

Parameter	Units	Source
Daily Insolation Data for Nanticoke, ON	kWh / day	(Kusterer, 2009)
Daily Temperature Data for Hamilton, ON		(National Research Council Canada, 2008)
On-Ground Insolation Hourly Profile		(Pidwirny, 2007)
Hourly Temperature Profile		(Pidwirny, 2007)
Nominal Operating Cell Temperature	45 C	(Suntech Power, 2009)
Cell Temperature Operating Limits	-40 C to 85 C	(Suntech Power, 2009)

Temperature Efficiency Loss	0.48% / °C away from NOCT	(Suntech Power, 2009)
PV System Power Efficiency	13.6%	(Archer & Barber, 2004)
PV Stack Maximum Voltage	1000 V	(Suntech Power, 2009)
Transformer Efficiency	99%	(Consortium for Energy Efficiency, 2000)
Inverter Efficiency	95%	(Navigent Consulting, 2006)
Capital Cost of PV Stack	US$ 3.47 / W	(OY Not LLC, 2009)
PV Balance of Plant Cost	33% of PV Cost	(United Nations Environment Program, 2002)
Lifespan of PV Stack	25 years	(Suntech Power, 2009)
Operating and Maintenance Cost	15300 Euro per year / 935 kW capacity	(Natural Resources Canada, 2009)
Inverter Cost	Can $ 0.70 / W capacity	(Navigent Consulting, 2006)
Inverter Operating Lifespan	5 years	(Navigent Consulting, 2006)

3.2.3 Nuclear Model

Nuclear reactors are assumed to be either operating at full capacity at all times, or are optimized to produce enough power to meet the hourly electricity demand. The reactor, ACR-1000 from AECL was studied more carefully, and performance of other nuclear reactor models was assumed to be similar.

The ACR-1000 technical summary outlines that the reactor is capable of generating 1085 MW of net power with a turbine efficiency of 34.2%. It has a core reactor tube wall thickness of 6.5 mm as opposed to 4 mm in previous CANDU reactors. This reduces the reactors susceptibility to fatigue and large thermal stresses. The most important benefit though is that unlike previous CANDU reactors, the ACR-1000 is designed with enhanced load-following characteristics. This has been important in providing flexibility for nuclear reactors to conserve power output when demand for power is low. As observed in Figure 33, power demand varies based on both times of day, and during seasons. Nuclear reactors have traditionally been designed and installed to meet electricity demand which is constant throughout the year. This is known as

baseload electricity demand. Coal has played the role of meeting peak electricity demand because of the ability to turn on and off the boilers on relatively short notice. However, with load-following characteristics, nuclear reactors with higher power rating can be installed to meet baseload demands, and also peak electricity demands throughout the day, thereby off-setting the demand for coal plants. It also allows for reducing wasted excess power generated when electricity demand is low.

Since data for load following characteristics for ACR-1000 is not available, data from a currently operating CANDU plant is used to estimate the performance of the new reactors. The CANDU 6 is capable of operating at 0-100% of full capacity while operating at near full capacity to account for frequency fluctuations and load-following. The unit is capable of reaching 0 to 100% of capacity from cold shutdown within 12 hours. In practice however, the unit is only allowed to fluctuate between 60% and 100% of full capacity to accommodate for xenon reactivity transients or gradients produced during prolonged power reduction (Jizhou et al., 2005). A high gradient over a short period of time results in core damage, thereby increasing service time and reducing the lifespan of the reactor. Moreover, rapid changes, especially towards higher energy output could lead to fission gas release, coolant vaporization, and/or fuel fragmentation (Knief, 1992, p. 340). Therefore, increasing the power from 60% to 100% of full capacity may take up to 4 hours. Table 15 outlines the practiced rate of power increase for the CANDU 6 reactor.

Table 15: Recommended Power Increase Rates for CANDU 6 Reactors (Jizhou et al., 2005)

Power Range	Maximum Rate
0 to 25 percent of full power	4% of actual power per second
25 to 80 percent of full power	1% of full power per second
80 to 100 percent of full power	0.15% of full power per second

Hence, for the nuclear reactor model, it is assumed that the ability to increase and decrease power output from the considered nuclear reactors is similar to the CANDU 6 reactor analyzed above. Figure 32 outlines the simplified process flow diagram for the nuclear reactors.

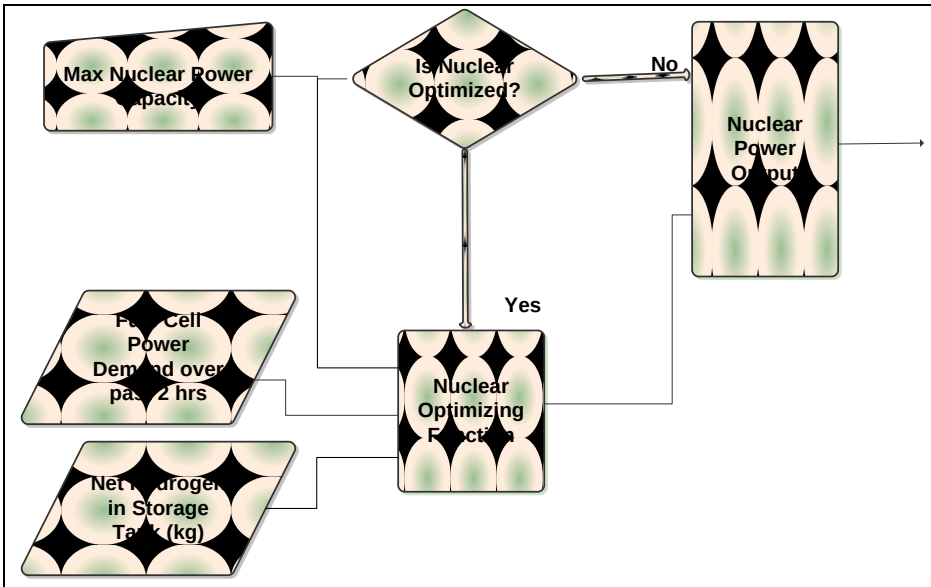

Figure 32: Nuclear Model Process Flow Diagram

Due to high cost of hydrogen storage in tanks, as opposed to underground hydrogen storage, nuclear reactors are optimized to reduce their power output to up to 60% of their peak capacity during periods of low electricity demand to minimize excess hydrogen production. However, when hydrogen is stored underground in mined caverns, storage volume is assumed not to be constrained, and nuclear reactors are allowed to continuously operate at full capacity in order to produce more hydrogen for transportation and industry. Figures 34 to 36 outline the logic for the nuclear power management function. Detailed code for the nuclear reactor power management function and costing is available in Appendix A.

Figure 33 outlines the daily electricity demand curves for different seasons. As observed, for all four seasons, electricity demand can be divided into 4 daily time periods: 10 am to 4 pm, 4 pm to 10 pm, 10 pm to 4 am, and 4 am to 10 am. When electricity demand is low, there is

excess supply. Hence, there is negative demand for the fuel cells to produce electricity and they do not operate. Likewise, when electricity demand is high, there is a supply shortage leading to a positive demand for fuel cell electricity from hydrogen in storage. The power management function for nuclear reactors determines the power output from nuclear reactors every 6 hours. As mentioned before, since the daily electricity demand profile can be divided into 4 distinct 6 hour periods, electricity demand from fuel cells is observed from 8 am – 10 am, 2 pm – 4 pm, 8 pm to 10 pm, and 2 am to 4 am and their cumulative electricity demand over each of the two observed hours is sent to the nuclear reactor power management function. Likewise, the net amount of hydrogen in the storage tanks is also sent to the nuclear power management function. The power management is done in three steps:

a) If the amount of hydrogen in the storage tank is above 500,000 kg, the nuclear reactors are ramped down to 60% of its capacity. Likewise, if hydrogen in storage tank is too low, the reactors are ramped up to their full capacity. If the amount of hydrogen in the storage tank is acceptable, then the electricity demand from fuel cells is considered.
b) If the cumulative electricity demand from fuel cells over the past 2 hours is greater than 1000 MW, the reactors are ramped up to 100% of their capacity. Likewise, if the demand is less than -1000 MW, the reactors are ramped down to 60% of their capacity. If neither case applies the ramp up and ramp down functions are applied.
c) The ramp up function increases the nuclear power output from 60% to 60% - 75%, and then from 75% - 100% capacity depending on the fuel cell demand. The ramp down function decreases power output from 100% to 75% - 100% and then to 60% - 75% of reactor capacity. The exact power output between the ranges is determined by the ratio of the fuel cell demands as outlined by the following sample calculation:

$$Suppose\ Fuel\ Cell\ Demand\ (FCDmd) \tag{10}$$
$$= 750\ MW, and\ the\ reactor\ was\ at\ 60\%\ capacity.$$
$$Since\ it\ is\ between\ 600\ MW\ and\ 1000\ MW, ramp\ up\ fcn$$
$$= \frac{1000 - 750}{1000 - 600} * (75 - 60) + 60\%$$
$$= 69.35\%\ \text{max}\ capacity$$

The ramp down function works in a similar fashion to reduce nuclear power. Figure 37 shows the expected hourly change in nuclear power output for a sample day, which responds to the daily electrical demand should in the figure below.

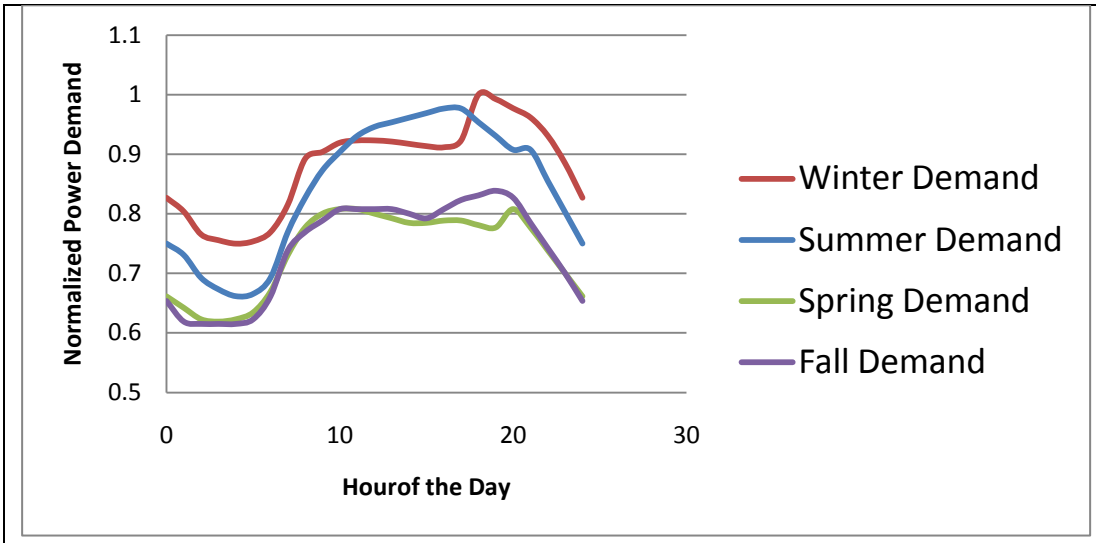

Figure 33: Normalized Hourly Electricity Demand in Ontario (Normalized Power Demand vs. Hour of the Day). Data obtained from (Zandt, 2006, p. 39)

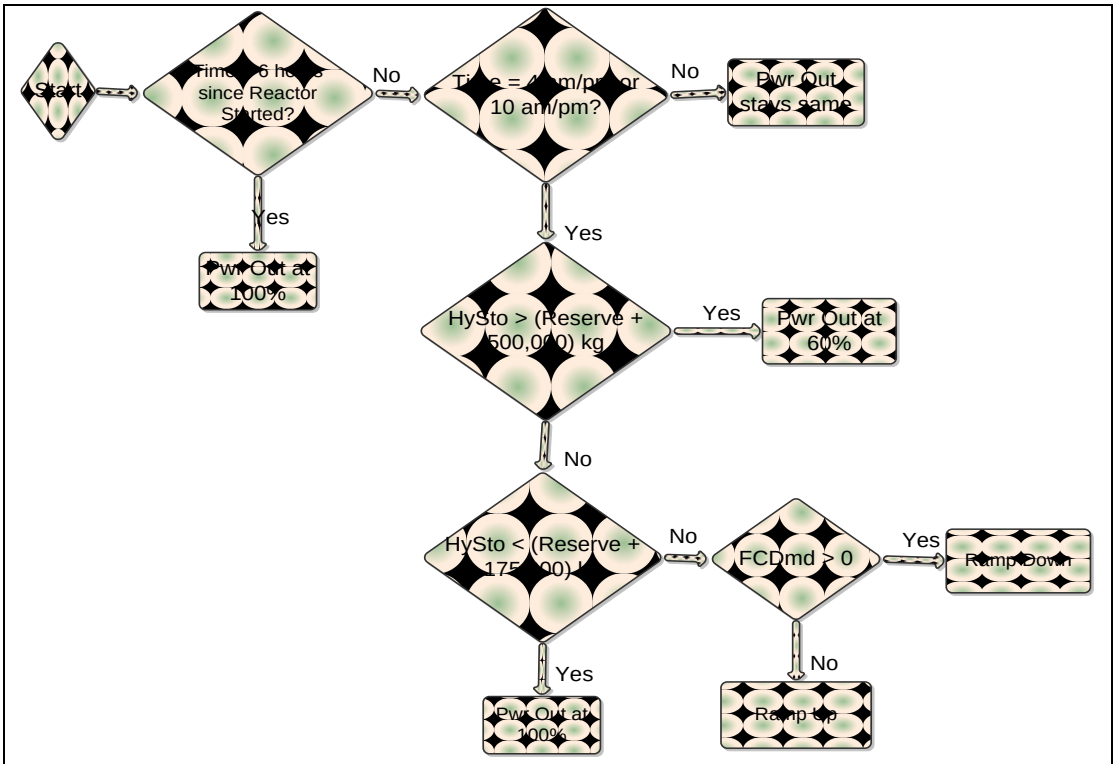

Figure 34: Nuclear Reactor Power Management Logic Flow Diagram

FCDmd = Fuel Cell Electricity Demand over past 2 hours, Pwr Out = Power Output as a function of peak capacity, HySto = Amt of hydrogen in the storage tank (in kg)

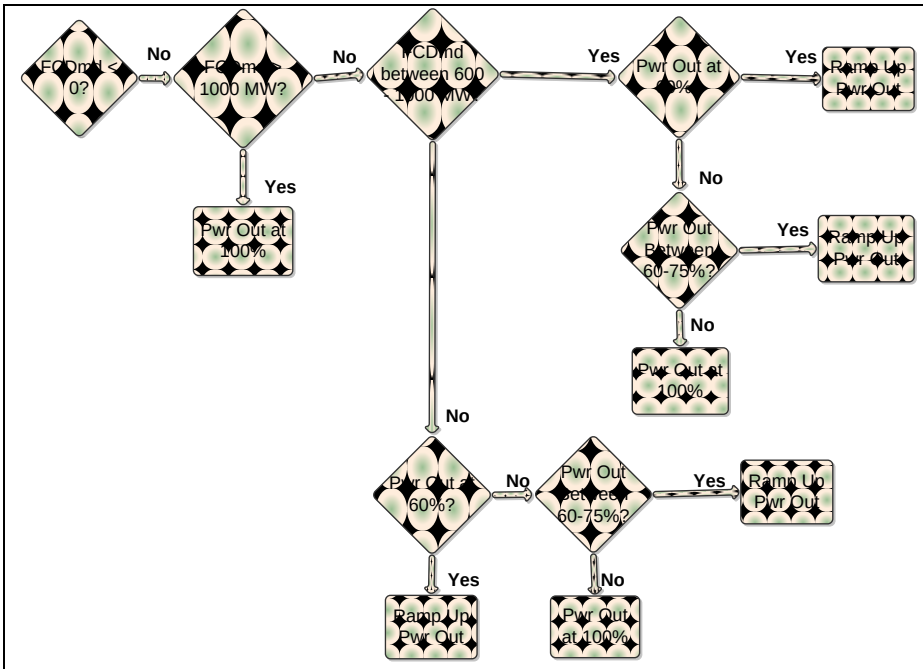

Figure 35: Nuclear Reactor Power Management Ramp Up Logic Flow Diagram

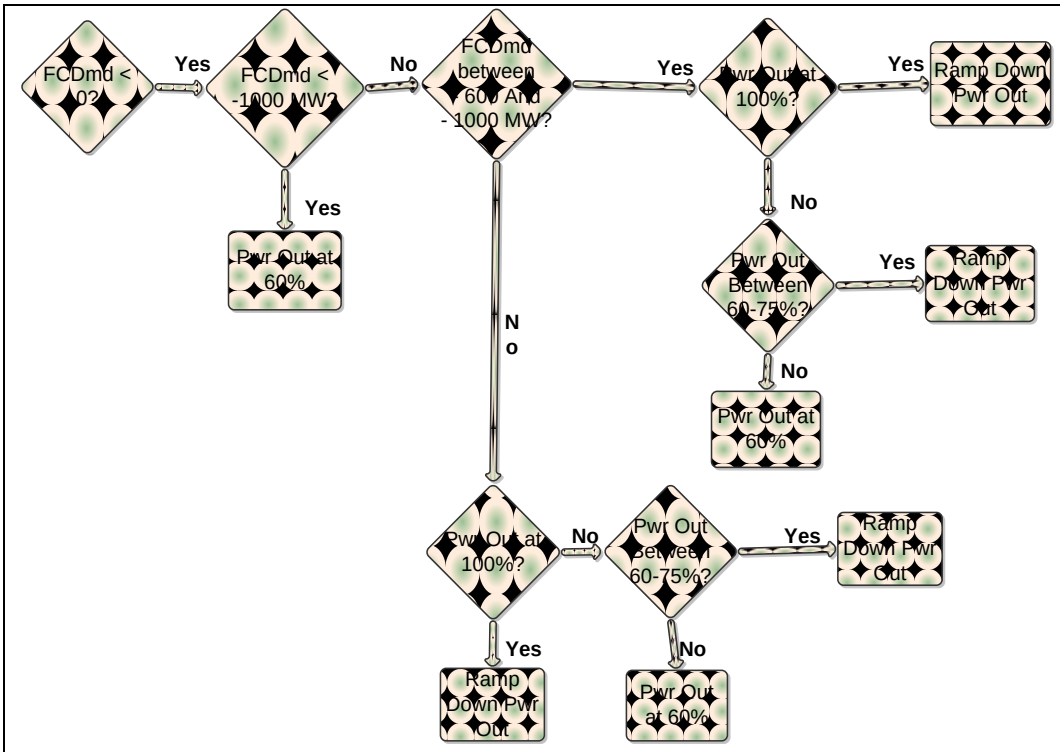

Figure 36: Nuclear Reactor Power Management Ramp Down Logic Flow Diagram

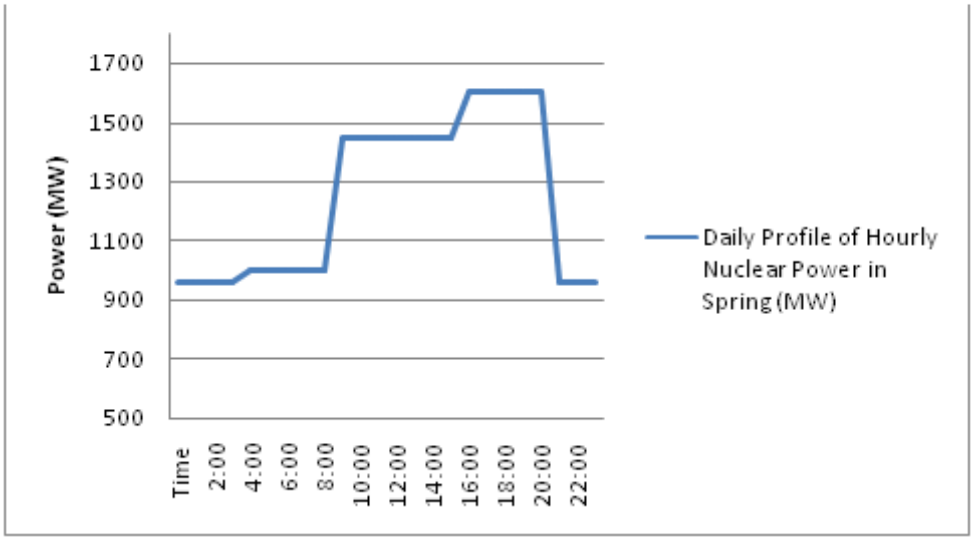

Figure 37: Hourly Nuclear Reactor Power Output (max cap 1600 MW) for a Sample Day

Nuclear Reactor Costing:

Figure 38 outlines the process flow diagram for determining the annual cost for operating the nuclear reactors. Table 16 outlines the total installed capital cost estimates obtained from different sources. Since the reactors considered for this model have a 60 year lifespan, an equivalent capital cost is considered.

Table 16: Total Installed Capital Cost Estimates for Nuclear Reactors from Different Sources

Capital Cost ($ / kW Capacity)	Source	Location
$2347 / kW Equivalent Cost: $4694 / kW	(World Nuclear Association, 2008)	Canada. ACR-700: 30 year life
$2972 / kW Equivalent Cost: $5944 / kW	(World Nuclear Association, 2008)	Canada. CANDU 6: 30 year life
$ 9.8 billion for 2234 MW reactor Equivalent Cost: $4386 / kW	(World Nuclear Association, 2008)	US. Westinghouse AP1000. 60 year life
$ 4206 / kW	(Parsons & Yangbo, 2009)	US- Florida. Westinghouse AP1000. 60 year life
$ 3450 / kW	(Parsons & Yangbo, 2009)	US-Texas. GE ABWR reactor. 60 year life

A study performed by Parsons, et al. stated that the average installed capital cost for nuclear reactors is $ 4000 / kW. The average of the above 5 values ($ 4594 / kW) was assumed to be the total installed capital cost of the nuclear reactor for the model. Sensitivity analysis will be done between $3450 / kW and $ 5944 / kW to determine its impact on total plant cost / MWh. The decommissioning costs at the end of the 60 year life span are expected to be 12% of the total installed capital cost (World Nuclear Association, 2008). Hence, assuming a real interest rate (Interest rate without considering inflation) of 5%, the calculation for total installed capital cost, and decommissioning cost is as follows:

$$Annual\ Capital\ Cost\ \left(\frac{\$}{yr}\right) = \tag{11}$$

$$Total\ Installed\ Capital\ Cost\ \left(\frac{\$}{kW}\right) * 1000\ \left(\frac{kW}{MW}\right)$$

$$* Nuclear\ Capacity\ (MW) * \frac{(1 + interest\ rate)^{60*0.46}}{60\ yrs}$$

$$Annual\ Decommissiong\ Cost\ \left(\frac{\$}{yr}\right) = \tag{12}$$

$$0.12 *\ Total\ Installed\ Capital\ Cost\ \left(\frac{\$}{kW}\right) * 1000\ \left(\frac{kW}{MW}\right)$$

$$* Nuclear\ Capacity \frac{(MW)}{\frac{(1 + interest\ rate)^{60*0.46}}{60\ yrs}}$$

Table 17 outlines the operating costs assumed for nuclear reactors.

Table 17: Operating Costs for Nuclear Reactors

Cost Type	Amount	US-Can$ Exchange Rate	Cost in Can $	Source
Fixed Operating Cost	$ 56 US / kW Capacity / yr	1.14871	$64.33 / kWcap-yr	(Parsons & Yangbo, 2009)
Variable Operating Cost	$ 0.00042 / kWh energy produced	1.14871	$0.000482458 / kWh energy produced	(Parsons & Yangbo, 2009)

Hence, the equation for annual operating cost is as follows:

$$Fixed\ Operating\ Cost\ (\frac{\$}{yr}) \tag{13}$$

$$=\ Nuclear\ Capacity\ (MW) * 64.33\ \left(\frac{\$}{kW * yr}\right) * 1000\ (\frac{kW}{MW})$$

$$Variable\ Operating\ Cost\ \left(\frac{\$}{h}\right) = Nuclear\ Power\ Generated\ each\ hour\ (MWh) * 0.000482458\ \left(\frac{\$}{kWh}\right) * 1000\left(\frac{kWh}{MWh}\right) \quad (14)$$

Table 18 outlines the uranium cost per kg considering uranium procurement, enrichment, and waste disposal costs. Considering all costs, uranium for a nuclear reactor costs Can$ 4809.42 / kg enriched uranium used.

Table 18: Costs Associated with Uranium Procurement, Enrichment, and Waste Disposal (WISE Uranium Project, 2009)

			Can US Exchange			Amt Needed / kg Enriched	Units	Total Cost
U_3O_8 Cost	55	$US / lb	1.14871	$63.18	$Can	8.9	kg	$1,237.05
Conversion	12	$US/Kg U	1.14871	$13.78	$Can	7.5	kg	$103.38
						8.9 kg U_3O_8 has 7.5 kg U		
Enrichment	163	$US/Kg U	1.14871	$187.24	$Can	7.3	kg	$1,366.85
						97% efficiency		
Fabrication	275	$US/Kg U	1.14871	$315.90	$Can	1	kg	$315.90
						This creates tail UF_6		
Tail Fuel Disposal Cost	110	$US/Kg U	1.14871	$126.36	$Can	6.5	kg	$821.33
Spent Fuel Disposal Cost	840	$US/Kg U	1.14871	$964.92	$Can	1	kg	$964.92
Total Cost / kg U Fuel								**$4,809.42**

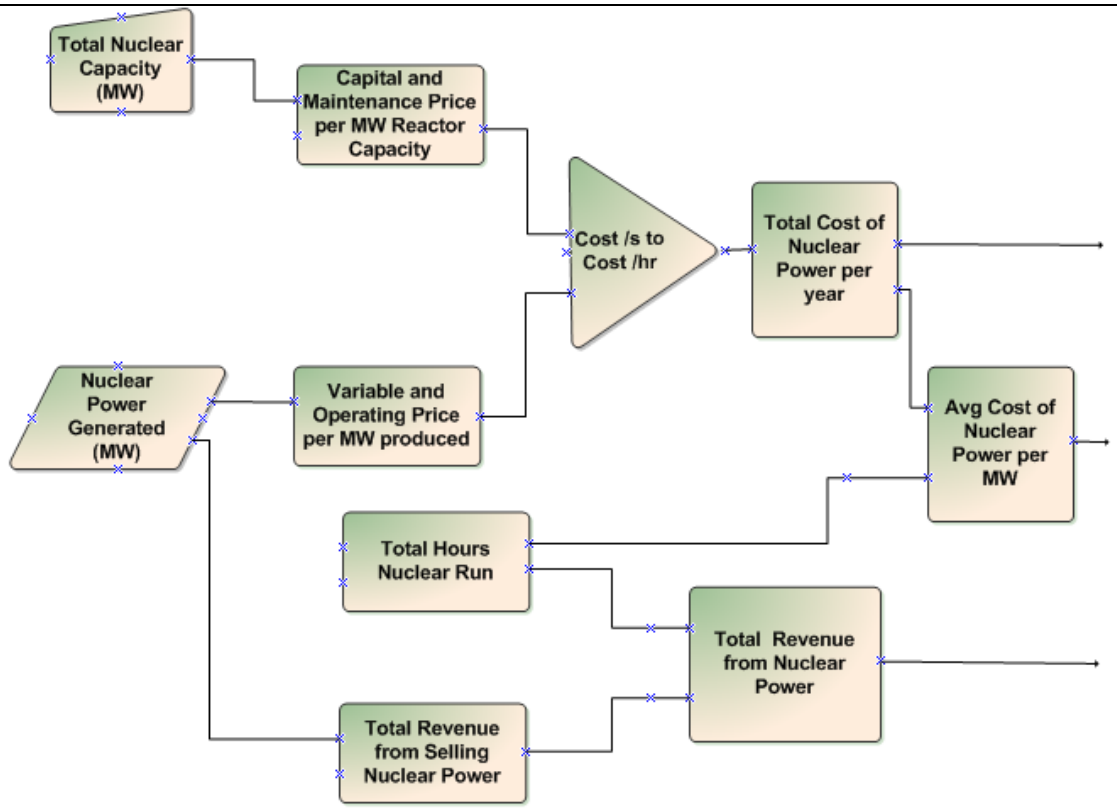

Figure 38: Process Flow Diagram for Nuclear Reactor Costs

One tonne of enriched uranium consists of 42 gigawatt-day (GWd) of energy (WISE Uranium Project, 2009) Since 1 GWd = 24000 MWh, 1 kg of enriched uranium consists of 1008 MWh of energy. Since a nuclear plant is 34.2% efficient (WISE Uranium Project, 2009), 1 kg of enriched uranium provides 344.74 MWh of energy output. Dividing the uranium price by the output energy content gives Can $ 13.95 / MWh of nuclear energy generated. Therefore, the equation below sums all the annual costs for the nuclear power plant.

$$
\begin{aligned}
&Total\ Annual\ Nuclear\ Plant\ Cost \\
&\quad = Annualized\ Total\ Installed\ Capital\ Cost \\
&\quad + Annualized\ Decommissioning\ Cost \\
&\quad + Yearly\ Fixed\ Operating\ Costs \\
&\quad + Yearly\ Variable\ Operating\ Costs \\
&\quad + Yearly\ Uranium\ Costs
\end{aligned} \tag{15}
$$

Table 19 provides a summary of all the parameters obtained and used for estimating the power output and annual costs of a nuclear power plant.

Table 19: Summary of Parameters Used for the Nuclear Plant

Parameter	Value	Source
Capacity Range	60% to 100% of full capacity	(Jizhou et al., 2005)
Capital Cost	$ 4594 / kW	(Parsons & Yangbo, 2009), (World Nuclear Association, 2008)
Operating life	60 years	(Bruce Power, 2008)
Real Interest Rate	5%	Assumed
Fixed Operating Cost	$ 56 US / kW	(Parsons & Yangbo, 2009)
Variable Operating Cost	$ 0.00042 US / kWh	(Parsons & Yangbo, 2009)
Uranium Oxide Cost	$ 55 US / lb	(WISE Uranium Project, 2009)
Uranium Conversion Cost	$ 12 US / kg U	(WISE Uranium Project, 2009)
Uranium Enrichment Cost	$ 163 US / kg U	(WISE Uranium Project, 2009)
Uranium Fabrication Cost	$ 275 US / kg U	(WISE Uranium Project, 2009)
U Conversion Efficiency	97%	(WISE Uranium Project, 2009)

Uranium Enrichment Efficiency	13.7%	(WISE Uranium Project, 2009)
Tail Fuel Disposal Cost	$ 110 / kg U	(WISE Uranium Project, 2009)
Spent Fuel Disposal Cost	$ 840 / kg U	(WISE Uranium Project, 2009)
Energy Content of Enriched Uranium	42 GWd / tone	(WISE Uranium Project, 2009)
Nuclear Power Plant Efficiency	34.2%	(WISE Uranium Project, 2009)

3.2.4 Biomass Model

Resource Estimation Model

Two kinds of fuel have been considered for Biomass: Refuse Derived Fuel (i.e. fuel from municipal solid waste (MSW) and Woody Biomass.

Refuse Derived Fuel

Removing recyclable and non-combustible materials from municipal solid waste (MSW) produces an upgraded fuel known as refuse-derived fuel (RDF). RDF can be direct-fired or gasified alone or blended with other fuels to produce steam to generate electricity.

There is an ongoing concern for landfill disposal for the GTA region in Ontario, Canada. This is located about 150 km away from the Nanticoke region. "Toronto sent approximately 696,327 tonnes of waste to Michigan landfill in 2006". However, "…Toronto's waste disposal contract with the Carlton Farms Landfill in Michigan expires at the end of 2010." (City of Toronto, 2007) Although there is a landfill in the London region now owned by the city there continues to be capacity and transportation concerns. Converting the Municipal Solid Waste in Toronto to RDF and sending them to Nanticoke will help Toronto dispose its refuse while allowing for power generation. Biomass using RDF emits less green house gases and NO_x, SO_x emissions than from coal. This also provides a more viable volume of MSW to manage, in that

the volume from the region of Nanticoke alone is small. Data obtained from Toronto Municipality estimates about 1,500,000 tonnes of Municipal Solid Waste is available every year. While 20% of this is diverted for recycling and other purposes, 80% or 1,163,000 tonnes of MSW were shipped to Michigan Landfills. Now that Toronto is planning to stop shipping waste to Michigan, the waste must be disposed off in other ways.

Non combustible material and recyclable materials are separated while the rest can be used as fuel for the boilers. While the energy requirement for material separation is not considered in this work, the cost of material procurement is considered as part of the overall cost per MWh of power generation using refuse derived fuel (Ontario Ministry of Energy, 2006). Generally, half of the garbage is non-combustible and must be separated (Ontario Ministry of Energy, 2006). This leaves around 600,000 Tonnes of MSW. On average, 1 kg of MSW yields 0.7 kg of RDF. (Ontario Ministry of Energy, 2006). This gives 380,000 BDT of RDF available for biomass.

The energy density of RDF is 15 GJ/ BDT. (Ontario Ministry of Energy, 2006)
The total amount of RDF that can be run for the whole year is:

$$RFD\ available \tag{16}$$

$$= 380{,}000\ BDT * 15\frac{GJ}{BDT} * \frac{h}{3600s} * \frac{yr}{8760hr} * 1000\frac{MJ}{GJ} * \frac{\frac{MW}{MJ}}{s}$$

$$= 180.75\ MWh - yr$$

A factor of 2 was applied to account for the fact that biomass reactors are optimized to run only during peak electricity demand, and, as a result will not be operating continuously throughout the year. Hence the total capacity for biomass is:

$$Biomass\ Total\ Cap = 180.75\ MWh - yr * 2 = 361.5\ MWh - yr \tag{17}$$

Since three boilers are used, the capacity for each boiler is:

$$Biomass\ Cap\ per\ boiler = 361.5\ MWh - yr * \frac{1}{3} = 120.5\ MWh - yr \tag{18}$$

Woody Biomass

For Ontario province, the annual allowable cut is roughly 32 million m^3 while 22 million m^3 is actually harvested. The 10 million m^3 gap represents the volume of round-wood not harvested within Forest Management Units (FMU) and trees left standing within cutovers (Ontario Ministry of Energy, 2006). All of the 10 million m^3 can be potentially used as fuel for biomass. Figure 39 lists the future supply for wood in Ontario.

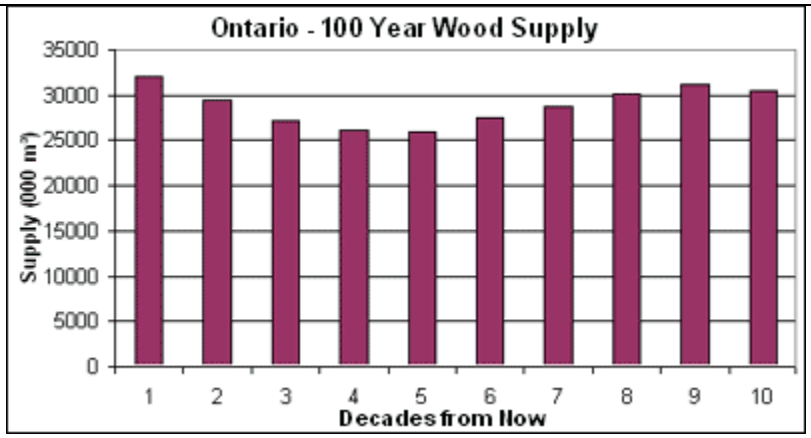

Figure 39: Supply of Wood in Ontario by the Decade (Ontario Ministry of Natural Resources, 2004)

As can be seen from the Figure 39, there is little concern about a dwindling supply of wood for the foreseeable future of Ontario. Hence, wood waste can be used for a significant time with no need for concern of diminishing supply. However, since transportation is expensive, only Southern Ontario's Wood Waste is being considered for the hub (it is assumed that wood material from the north would go to the Atikokan plant). Transportation cost and environmental impact of the mass is not considered in this analysis.

Most of the forested regions in Southern Ontario are privately owned. Hence, there is no real data available on the exact amount of forest harvest residue available for use for the Nanticoke hub. However, using available forestry data and amount of wood waste obtained from another part of Ontario, we can estimate the amount of waste for the Southern Forests. For this, the forestry data obtained from north-western Ontario is used. Based on this amount, an estimate

of the amount of wood waste available in southern Ontario can be obtained. Table 20 shows the amount of hardwood in southern Ontario (Ontario Ministry of Energy, 2006). Woody Biomass has an energy density of 19 GJ/BDT (Ontario Ministry of Energy, 2006). The following equations represent the method for calculating the total amount of wood biomass available in the region per year.

Table 20: Amount of Hardwood in Southern Ontario

Type of Tree	Amount Present in 2003
Tolerant Hardwoods	660.2 x 10^3 m^3 / yr
White and Red Pine	372.6 x 10^3 m^3 / yr
Poplar	347.1 x 10^3 m^3 / yr
White Birch	90.4 x 10^3 m^3 / yr
Spruce, Pine, Fir	119.6 x 10^3 m^3 / yr
Other Conifers (hemlock, cedar, larch)	80.4 x 10^3 m^3 / yr
Total Hardwood	1670.3 x 10^3 m^3 / yr

$$Wood\ Waste\ in\ Southern\ Ontario = Total\ Forestry\ in\ Southern\ Ontario * \frac{(Wood\ Waste\ in\ North\ West\ Ontario)}{(Total\ Forestry\ in\ Northwest\ Ontario)} \quad (19)$$

This gives:

$$Wood\ Waste\ in\ Southern\ Ontario = 1670.3\ x \frac{10^3 m^3}{yr} * 238000 \frac{BDT}{15392.8x10^3 m^3/yr} = 25825.8\ BDT \quad (20)$$

$$Woody\ Biomass\ Cap\ (MWh - yr) = 25825.8\ BDT * 19 \frac{GJ}{BDT} * \frac{h}{3600\,s} * \frac{yr}{8760\,hr} * 1000 \frac{MJ}{GJ} * \frac{\frac{MW}{MJ}}{s} = 15.56\ MWh - yr \quad (21)$$

$$Woody\ Biomass\ Cap = 15.56\ MWh - yr * 3 = 46.68\ MWh - yr$$

A factor of 2 was applied to account for the fact that biomass reactors are optimized to run only during peak electricity demand, and, as a result will not be operating continuously throughout the year. The wood boiler will have a capacity of 93.36 MWh-yr.

$$Woody\ Biomass\ Cap = 46.68\ MWh - yr * 2 = 93.36\ MWh - yr \tag{22}$$

Electricity Generation Model

Biomass boilers are assumed to be optimized to produce enough power to meet the hourly electricity demand. An additional coal boiler is used to help meet demand for 2000 hours in a year. Different scenarios are run based on whether the coal boiler is on or off. The boiler is assumed to be the AGS Boiler, manufactured by Babcock and Wilcox. It was observed that without a small amount of coal operation, hydrogen and fuel cell equipment capacity became unmanageably large to accommodate for a very limited time period. This led to significant unused excess capacity during off-peak seasons. It was also assumed that during the technology implementation period there will likely be a few coal boilers remaining in operation (or at least as an available backup). There are currently 8 boilers in the Nanticoke Coal Plant. For our energy hub, the boilers are assumed to be modified to suit the fuel required. The modification of the boilers is required to curb the emissions and also to account for the fact that the localized heating in the boiler areas will change depending on the fuel. The boilers modification is also based on the resources estimated for a fuel and other assumptions. As such, 3 boilers are expected to be run on RDF while 1 boiler is to be run on Wood Waste. It is assumed that there are no modifications needed for the 5th boiler to run on coal.

The AGS Boiler is estimated to run at an efficiency of 36% for the biomass to power conversion. The data for emission control modifications and also the capital and operational costs of alternatives to coal-fired power generation were taken from a study done by Forest Bioproducts Inc. (Ontario Ministry of Energy, 2006). Table 21 lists the emission benefits from the modifications.

Table 21: Emission Benefits from the Modifications Done to the AGS Boiler

Control	Contaminant Removed	Removal Efficiency
Selective catalytic reduction	NO_x	67%
Flue gas desulfurization	SO_x	80%
Electrostatic precipitator	PM	94%
Electrostatic precipitator	Hg	75%

Note that the coal plant in Nanticoke has eight generating units which are capable of producing 3,964 megawatts (MW) of power. The station's annual production is in the range of 20 to 24 billion kilowatt-hours (kWh), enough electricity to run nearly 2.5 million households for a full year. (Ontario Power Generation, 2009)

There is a loss of power output when the boilers are modified to suit other fuels. The same modifications for a 215 MW Boiler for Atikokan Coal Plant yielded a 150 MW Boiler for RDF and Wood. (Ontario Ministry of Energy, 2006). Assuming the same % loss in efficiency, the max capacity for the RDF and Wood Boilers would be

$$Max\ Capacity\ for\ the\ modified\ boiler = 500\ MW * \frac{150}{215} ratio \approx 350\ MW \tag{23}$$

However, the actual cap used for the RDF and Wood boiler is based on the resource estimated, 350 MW is just the maximum power that could be output. Only a 300 MW capacity is being used for the coal boiler when on. This is to keep emissions at a minimum as well as to only help satisfy the peak demand.

Although Biomass does not provide as much power as a nuclear reactor, it can easily be ramped up and down, and shut down. This makes it ideal to ramp up when supply is less than demand and to shut down when not needed. Hence, biomass is turned off and on frequently. A start-up from a “hot shutdown” takes about an hour. Hence Biomass boilers are freely used to

help with the peak demand. The coal boiler can be turned off, and we consider half our scenarios with the coal completely turned off. To help simplify the technology selection process while including wind and solar, the biomass boilers are either turned off when hydrogen in storage tank is above 800,000 kg, or is run at a minimum 60% capacity. When hydrogen in storage is less than 800,000 kg, the biomass boilers run at incremental increased power output from 60% to 100% capacity, as power demand increases during peak season. It is to be noted that the total capacity is not the max power output of the boiler, but a limit set in order for biomass to run at full capacity for the whole year. While it is possible for biomass to run at full capacity for the whole year, this is not done to ensure no power is lost. Although theoretically all the excess biomass power can be converted to hydrogen through electrolysis, this would increase the number of electrolyzers to an unrealistic number, and will increase the capital cost. Limiting the electrolyzer number while letting biomass run at full capacity would result in power loss as the electrolyzer cannot keep up with the electricity. In order to curb that, biomass energy is only operated at selected times throughout the year. Figure 40 outlines a simple process flow diagram for biomass boilers.

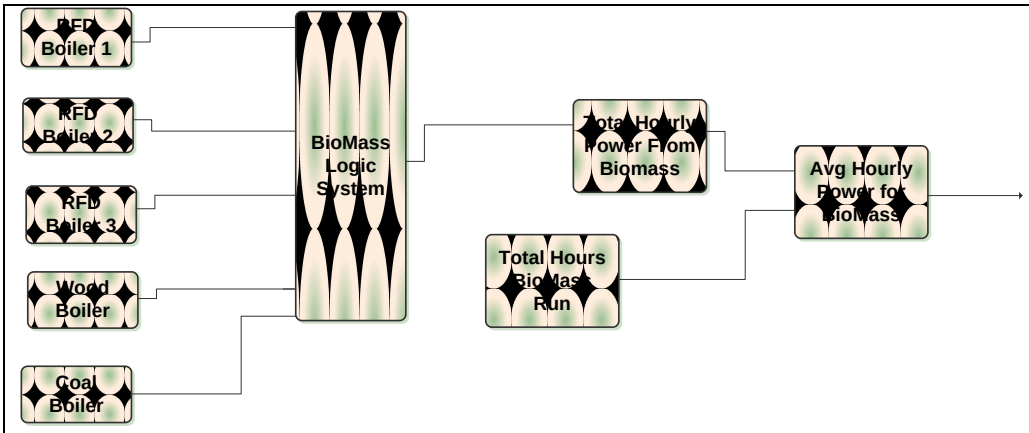

Figure 40: Process Flow Diagram for Biomass Power Output

Each boiler box calculates the power demand from the reactor based on the Supply – Demand function. The coal boiler, however, runs at 300 MW when on. This power is then added up and the total power for biomass is calculated. The average power for biomass just divides the total power for biomass by the number of hours biomass was run. Figures 41 to 44 outline the logic behind the RDF and Wood Boiler power management function. Detailed code for biomass power can be obtained from Appendix A.

Coal Logic:

The logic is simple for Coal Boilers in the model. It is manually turned on and off. When on, the boiler runs at 300 MW continuously till turned off. This is to help ensure peak demand is met.

RDF and Wood Boiler Logic:

As observed, for all four seasons, electricity demand can be divided into 4 regions: 10 am to 4 pm, 4 pm to 10 pm, 10 pm to 4 am, and 4 am to 10 am. When electricity demand is low, there is excess supply. Hence, there is negative demand for the fuel cells to produce electricity. Likewise, when electricity demand is high, there is a supply shortage leading to a positive demand for fuel cell electricity. Electricity demand from fuel cells is observed from 8 am – 10 am, 2 pm – 4 pm, 8 pm to 10 pm, and 2 am to 4 am, and their cumulative electricity demand over each of the two observed hours is sent to the biomass reaction power management function. Likewise, the net amount of hydrogen in the storage tanks is also sent to the biomass power management function. The power management is done in three steps:

1. If the amount of hydrogen in the storage is too high (approximately over 800,000kg), the boilers are turned off. If there is an adequate supply of hydrogen in storage (between 500,000 and 800,000 kg), biomass reactors are run at 50% capacity. Likewise, if hydrogen in storage is too low (less than 125,000 kg), the boilers are ramped up to their full resource capacity. If the amount of hydrogen in the storage is between 125,000 kg and 500,000 kg, only then is the electricity demand from fuel cells considered.

2. If the cumulative electricity demand from fuel cells over the past 2 hours is greater than 1000 MW, the boilers are ramped up to 100% of their resource capacity. Likewise, if the demand is less than -1000 MW, the reactors are ramped down to 60% of their resource capacity. If neither case applies the ramp up and ramp down functions are applied.

3. The ramp up function increases the biomass power output from 60% to 60% - 75%, and then to 75% - 100% capacity depending on the fuel cell demand. The ramp down function decreases power output from 100% to 75% - 100% and then to 60% - 75% of boiler capacity. The exact power output between the ranges is determined by the ratio of the fuel cell demands as outlined by the following sample calculation:

$$Suppose\ Fuel\ Cell\ Demand\ (FCDmd) \tag{24}$$
$$= 750\ MW, and\ the\ boiler\ was\ at\ 60\%\ capacity.$$
$$Since\ it\ is\ between\ 600\ MW\ and\ 1000\ MW, ramp\ up\ fcn$$
$$= \frac{1000 - 750}{1000 - 600} * (75 - 60) + 60\%$$
$$= 69.35\%\ \text{max}\ capacity$$

The ramp down function works in a similar fashion to reduce biomass power.

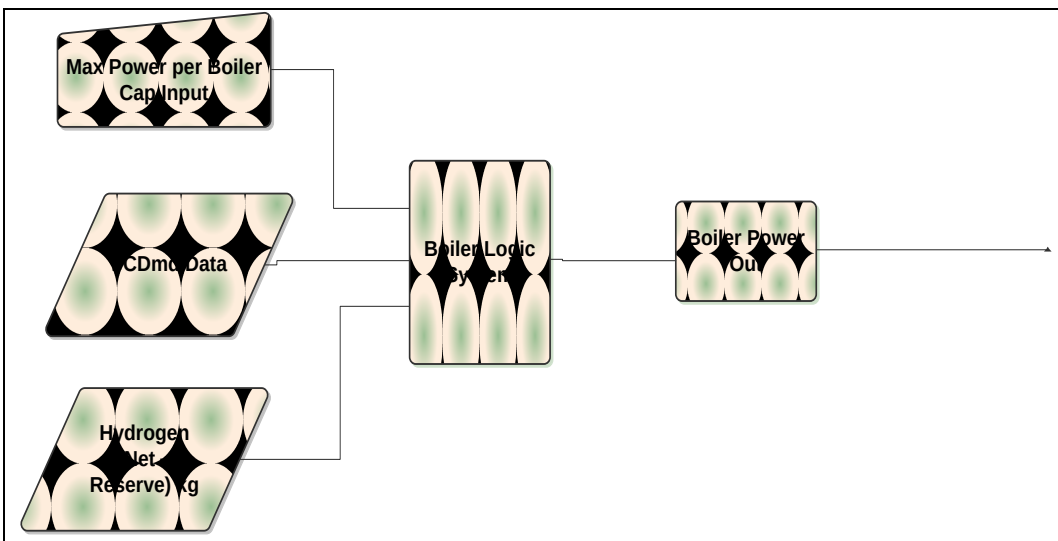

Figure 41: Process Flow Diagram for a RDF or a Wood Boiler

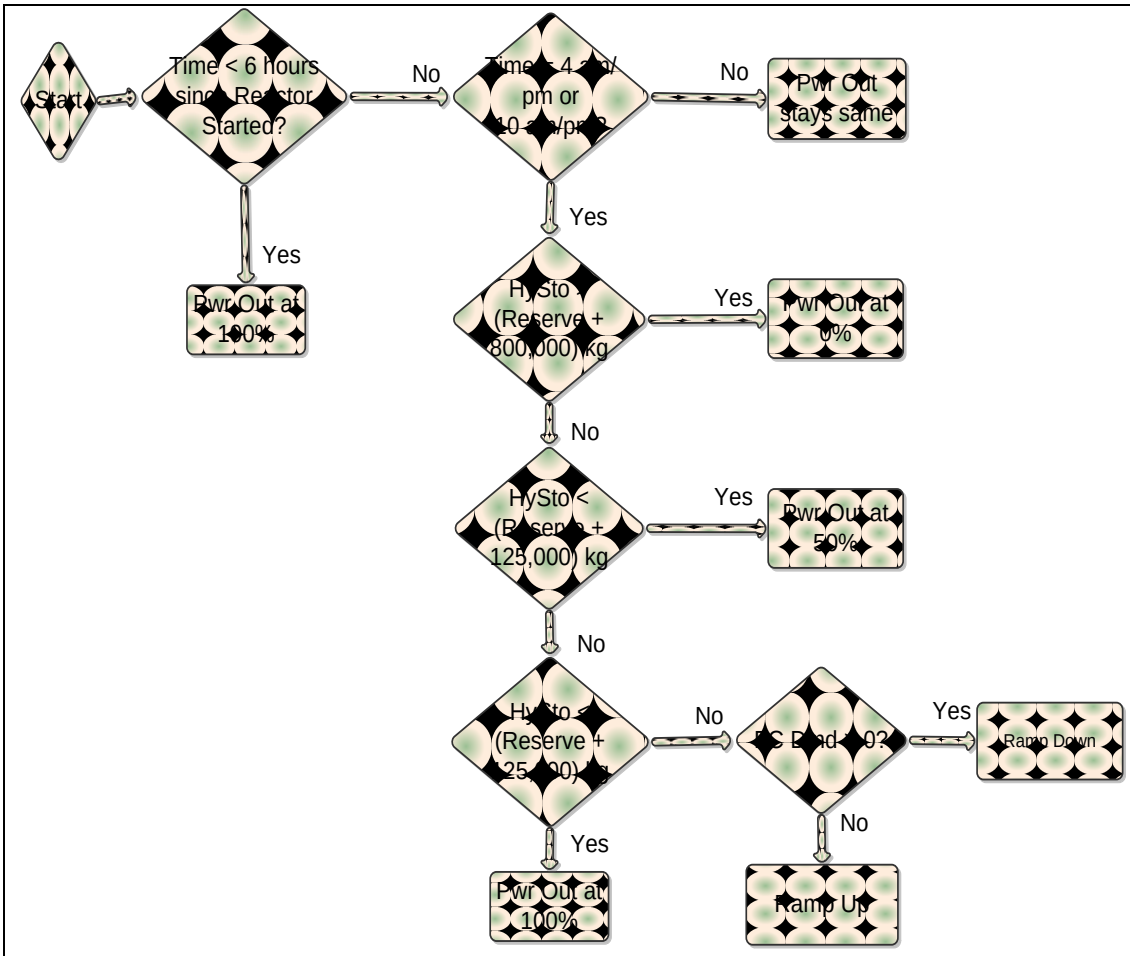

Figure 42: RDF and Wood Boiler Power Management Logic Flow Diagram

FCDmd = Fuel Cell Electricity Demand over past 2 hours, Pwr Out = Power Output as a function of peak capacity, HySto = Amt of hydrogen in the storage tank (in kg)

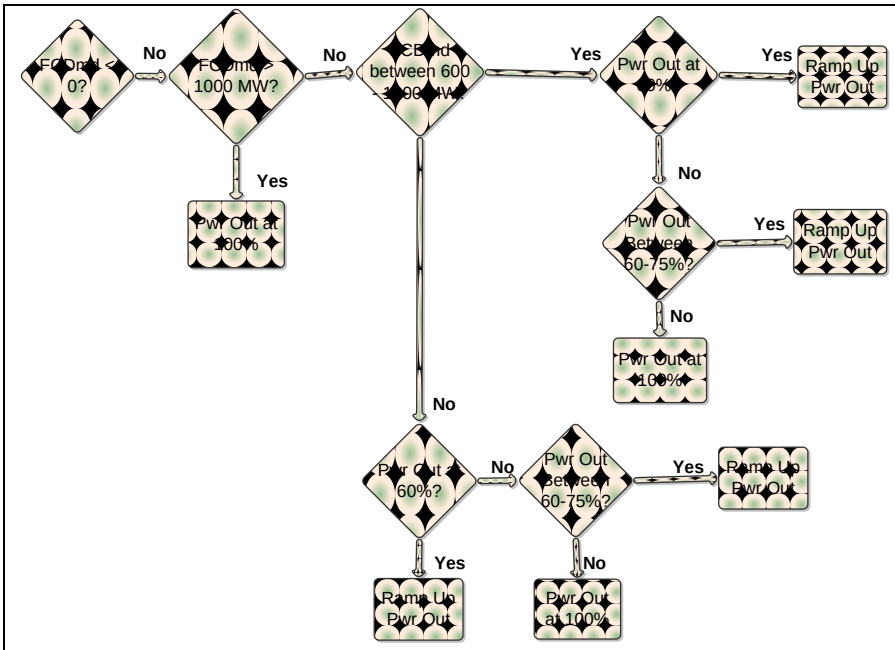

Figure 43: RDF and Wood Boiler Power Management Ramp Up Logic Flow Diagram

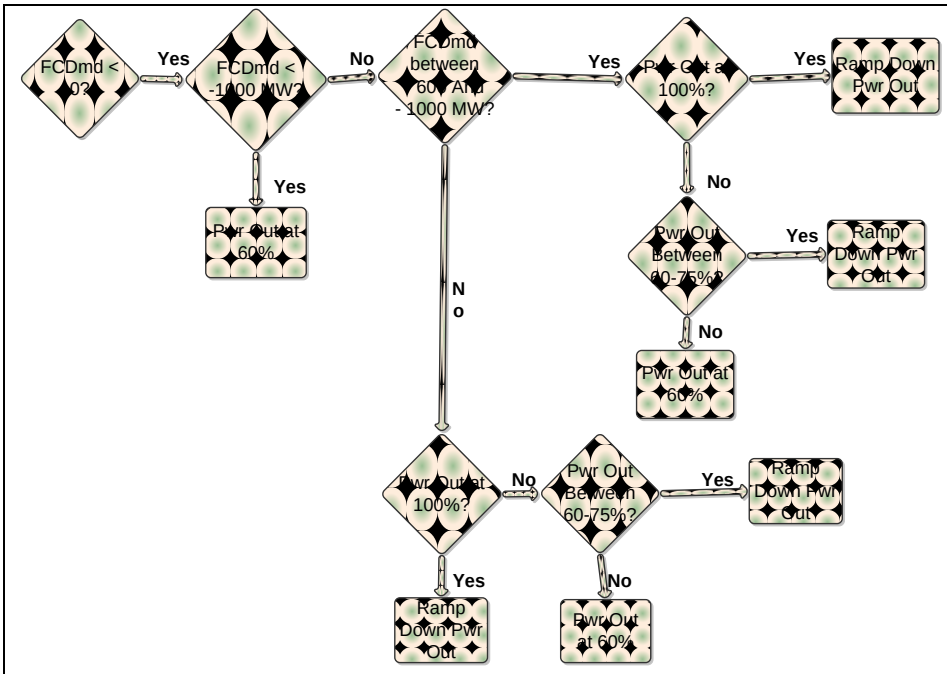

Figure 44: RDF and Wood Boiler Power Management Ramp Down Logic Flow Diagram

Biomass Costing:

The costing for the biomass model was derived primarily from the report, "An Assessment of the Viability of Exploiting Bio-Energy Resources Accessible to the Atikokan Generating Station in Northwestern Ontario" (Ontario Ministry of Energy, 2006). This report discusses the costs and benefits of modifying existing coal reactors to biomass reactors. The modifications suggested for the coal boilers in the above report are similar to the modifications needed in Nanticoke for the RDF and Wood boilers. It is assumed that the Levelized Unit Cost (LUC) presented for each kind of boiler will hold true for the Nanticoke hub as well.

RDF Costing:

The main component to the costing for the RDF modification is the $406 million needed for refurbishing coal boilers. Out of this, $206 million is needed to control emissions while $200 million will be needed for modifying the boiler to be suitable for RDF. (Ontario Ministry of Energy, 2006) The reason the modifying costs are so high is because of RDF being corrosive. The boiler must be retrofitted with equipment to balance that. The assumptions for obtaining the costs for RDF modification are found in Table 22.

Table 22: Assumptions and the Prices for the Modified Boiler for RDF (Ontario Ministry of Energy, 2006)

Assumption	Value
Project Capital Cost with Emission Control	$ 406,000,000
Plant Economic Life (years)	20
Feed Stock Cost ($/BDT)	87
Debt Financed Portion (%)	100
Debt Finance Rate (%/yr)	5
Income Tax Rate (%)	30
Inflation Rate (%/yr)	2.2
Project Capital ($/MWh)	45
Operation and Maintenance Cost ($/MWh)	36
Levelized Unit Energy Cost ($/MWh)	140

Based on the LUEC, the model calculates the cost for RDF boiler power by multiplying the power output by $140 per MWh.

Wood Boiler Costing:

Similar to RDF Boiler, the main component of the costing is the $206 million required to control emissions. Another $100 million is needed to make the boilers suitable for wood as a fuel. Table 23 lists the assumptions.

Table 23: Assumptions and the Prices for the Modified Boiler for Wood (Ontario Ministry of Energy, 2006)

Assumption	Value
Project Capital Cost with Emission Control	$ 306,000,000
Plant Economic Life (years)	20
Feed Stock Cost ($/BDT)	180
Debt Financed Portion (%)	100
Debt Finance Rate (%/yr)	5
Income Tax Rate (%)	30
Inflation Rate (%/yr)	2.2
Project Capital ($/MWh)	23
Operation and Maintenance Cost ($/MWh)	26
Levelized Unit Energy Cost ($/MWh)	115

Based on the LUEC, the model calculates the cost for Wood boiler power by multiplying the power output by $115 per MWh.

Coal Boiler Costing:

For the coal boiler, the data was obtained from (Ayres et al., 2004). Table 24 lists the assumptions as follows:

Table 24: Assumptions and the Prices for a Coal Boiler (Ayres et al., 2004)

Assumption	Value
Capital Expenditures ($/MWh)	20.38
Total Operating and Maintenance Cost ($/MWh)	9.3
Fuel ($/MWh)	18.04
Decommissioning (%)	0
Income Tax (%)	0
Operating Life (yr)	30
Levelized Unit Energy Cost ($/MWh)	47.72

The cost of $ 47.72 is multiplied to the total power output by the coal boiler to give the total cost for coal. All the boiler prices are then added to obtain the total costing for biomass.

CO_2 and Other Environmental Pollution Costing

The equipment used to control the emissions in the modified boilers ensures that there are fewer emissions from the biomass boilers as listed in Table 21. The boilers for biomass are hence, more environmental friendly than coal. Table 25 shows the emissions data for each type of boiler.

Table 25: Emissions Data for Each Type of Boiler

Fuel Source	CO_2 (kg/MWh)	NO_x (g/MWh)	SO_x (g/MWh)	PM (g/MWh)	Hg (mg/MWh)
Lignite	1,100	3290	6000	41	42
RDF	1,100	680	322	1720	490
Woody Biomass	1130	330	22	89	4

The emissions of coal were assumed to be the same as lignite. The difference in amount of each type of emission from lignite was calculated for RDF and Woody Biomass, and sent to the emissions box. Calculation for the prices of the emissions is discussed in section 3.2.10.

Chart of Parameters

Table 26 provides a summary of all the parameters obtained and used for estimating the resource, power output, annual costs, and emissions for the biomass model.

Table 26: Summary of All Parameters for Biomass

Parameter	Value	Source
Project Capital Cost with Emission Control, Woody Biomass	$ 306,000,000	(Ontario Ministry of Energy, 2006)
Plant Economic Life (years), Woody Biomass	20	(Ontario Ministry of Energy, 2006)
Feed Stock Cost ($/BDT) Woody Biomass	180	(Ontario Ministry of Energy, 2006)
Debt Financed Portion (%) Woody Biomass	100	(Ontario Ministry of Energy, 2006)
Debt Finance Rate (%/yr) Woody Biomass	5	(Ontario Ministry of Energy, 2006)
Income Tax Rate (%) Woody Biomass	30	(Ontario Ministry of Energy, 2006)
Inflation Rate (%/yr) Woody Biomass	2.2	(Ontario Ministry of Energy, 2006)
Project Capital ($/MWh) Woody Biomass	23	(Ontario Ministry of Energy, 2006)
Operation and Maintenance Cost ($/MWh) Woody Biomass	26	(Ontario Ministry of Energy, 2006)

Levelized Unit Energy Cost ($/MWh) Woody Biomass	115	(Ontario Ministry of Energy, 2006)
Project Capital Cost with Emission Control RDF Boiler	$ 406,000,000	(Ontario Ministry of Energy, 2006)
Plant Economic Life (years) RDF Boiler	20	(Ontario Ministry of Energy, 2006)
Feed Stock Cost ($/BDT) RDF Boiler	87	(Ontario Ministry of Energy, 2006)
Debt Financed Portion (%)RDF Boiler	100	(Ontario Ministry of Energy, 2006)
Debt Finance Rate (%/yr) RDF Boiler	5	(Ontario Ministry of Energy, 2006)
Income Tax Rate (%)RDF Boiler	30	(Ontario Ministry of Energy, 2006)
Inflation Rate (%/yr) RDF Boiler	2.2	(Ontario Ministry of Energy, 2006)
Project Capital ($/MWh) RDF Boiler	45	(Ontario Ministry of Energy, 2006)
Operation and Maintenance Cost ($/MWh) RDF Boiler	36	(Ontario Ministry of Energy, 2006)
Levelized Unit Energy Cost ($/MWh) RDF Boiler	140	(Ontario Ministry of Energy, 2006)
Capital Expenditures ($/MWh) Coal Boiler	20.38	(Ayres, MacRae, & Stogran, 2004)
Total Operating and Maintenance Cost ($/MWh) Coal Boiler	9.3	(Ayres et al., 2004)
Fuel ($/MWh) Coal Boiler	18.04	(Ayres et al., 2004)
Operating Life (yr) Coal Boiler	30	(Ayres et al., 2004)

Levelized Unit Energy Cost ($/MWh) Coal Boiler	47.72	(Ayres et al., 2004)
Wood Waste in North West Ontario (kg)	238,000	(Ontario Ministry of Energy, 2006)
Energy Density of RDF	15 GJ / BDT	(Ontario Ministry of Energy, 2006)
Energy Density of Woody Biomass	19 GJ / BDT	(Ontario Ministry of Energy, 2006)
Municipal Sewage Waste of Toronto (BDT)	600,000	(Ontario Ministry of Energy, 2006)

3.2.5 Electrolyzer Model

Since alkaline electrolyzers have been around commercially longer than PEM electrolyzers, they were chosen as the electrolyzer technology to be implemented for this model. Data from an electrolyzer (Model: HyStat-Q IMET 1000 Series) manufactured by Hydrogenics Inc. in Mississauga, Ontario was used to estimate the power output, the efficiency. Table 27 outlines the required data for modelling the electrolyzer power output.

Table 27: Required Data Obtained for HyStat-Q IMET 1000 Series to Model Electrolyzer Power Output (Hydrogenics Corp, 2009)

Parameter	Value
Electrolyzer Running Capacity Range	40% - 100%
Standby Possible (0.% Power)	Yes
Power Consumed	5.2 kWh / Nm^3 H_2 produced
Max Hydrogen Generated	960 Nm^3 / h
Hydrogen Output Pressure	1 MPa

Figure 45 outlines the process flow diagram for hydrogen generation from electrolyzers. When the amount of power supply available is greater than power demand, the excess power is converted to hydrogen using electrolyzers. An overall efficiency factor needs to be calculated to determine how much of the excess power goes towards producing hydrogen. Since,

electrolyzers take in direct current (DC), and the incoming electricity is in the form of alternating current (AC), an AC/DC converter is needed. This has an efficiency of 95% (Navigent Consulting, 2006). Furthermore, since electrolyzers take in a voltage of 0.50 kV, and the incoming power is at 500 kV, a step down transformer is needed to lower the voltage. This has an efficiency of 99% (Consortium for Energy Efficiency, 2000). Furthermore, since hydrogen is stored underground at 7 MPa while hydrogen from electrolyzers comes out at 1 MPa, a compressor is needed to pressurize the hydrogen. This has an efficiency of 85% (Peters, Timmerhaus, & West, 2004). Therefore, the actual power that goes towards generating hydrogen is as follows:

$$\begin{aligned} &Power\ to\ Hydrogen\ generation \\ &\quad = Excess\ power * compressor\ efficiency \\ &\quad * transformer\ efficiency * inverter\ efficiency \end{aligned} \tag{25}$$

This power is then divided by the power consumed to generate 1 Nm^3 of hydrogen to determine the amount of Nm^3 of hydrogen generated each hour. Since each unit can generate a maximum of 960 Nm^3 H_2 / h, the total hydrogen generated is divided by the maximum generated per unit to obtain the number of electrolyzer units required each hour. The number of electrolyzers each hour is rounded up to the next nearest integer to ensure that all the electrolyzers at any given time are either not being used, or are running at 100% capacity, with the last two running at a minimum 50% capacity. The maximum number of electrolyzers is either capped at 100 or 500 depending on the simulation run.

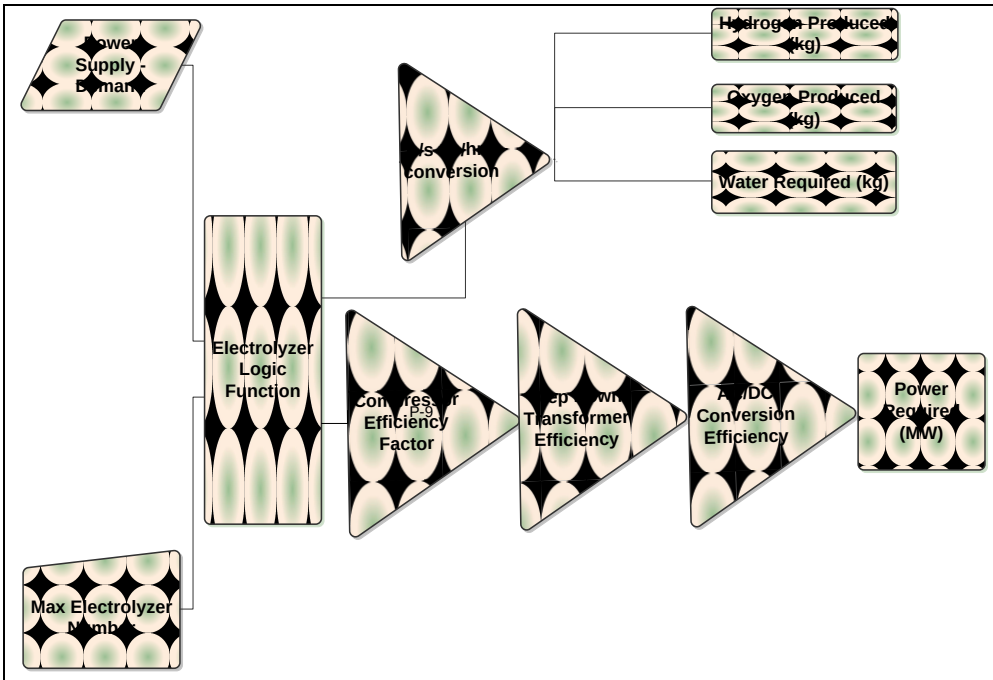

Figure 45: Process Flow Diagram for Hydrogen Generation from Electrolyzers

Since one mole of water generates one mole of hydrogen and half a mole of oxygen, for every kg H_2 generated by the electrolyzer, 8 kg of oxygen is generated, and 9 kg of pure water is consumed. This information is used to determine the hourly water consumption and oxygen production.

Figure 46 outlines the process flow diagram to determine the yearly cost of electrolyzers used. Data for the capital costs of electrolyzers were obtained from National Renewable Energy Laboratory (NREL), where the capital and operating costs of a 485 Nm^3/h hydrogen production facility from electrolyzers was considered (Ramsden, 2008). Although NREL specified the operating costs to be 9% of the Total Installed Capital Cost (TICC), it included costs for renting the land (2% of TICC) on which the electrolyzer was situated. In addition, NREL also considered costs for electricity, and water. However, for Nanticoke, since land was already purchased, and since electricity and water were produced in house, these costs were assumed to be negligible Therefore, the operating costs were assumed to be 7% of TICC. In addition, it was also pointed out that electrolyzers, while have a life span of 20 years, need to be refurbished at the end of 10 years, and would cost 30% of the TICC. Therefore, annual

refurbishment costs are also considered. Therefore, the equations for calculating the costs are as follows:

$$Total\ Annual\ Electrolyzer\ Cost\ (\$\ per\ year) = Capital\ Cost\ per\ year + Operating\ Cost\ per\ year + Refurbishment\ Costs\ per\ year \tag{26}$$

$$Capital\ Cost\ per\ year = \frac{Total\ Installed\ Capital\ cost\ per\ 485\ Nm^3 per\ hour\ hydrogen\ Production * \frac{960\ Nm^3 per\ hour}{485\ Nm^3 per\ hour} * (1.05)^{20*0.46}}{20} \tag{27}$$

$$Operating\ Costs\ per\ year = 0.07 * Capital\ Costs\ per\ year \tag{28}$$

$$Refurbishment\ Costs\ per\ year = \left(\frac{0.30 * Total\ \ Installed\ \ Capital\ \ Cost\ for\ 960\ Nm^3\ per\ hour}{1.05^{10}} * \frac{1.05^{20*0.46}}{20}\right) \tag{29}$$

The total annual cost is then divided by the total power consumed by electrolyzers throughout the year to determine the cost of operating electrolyzers in $ per MWh.

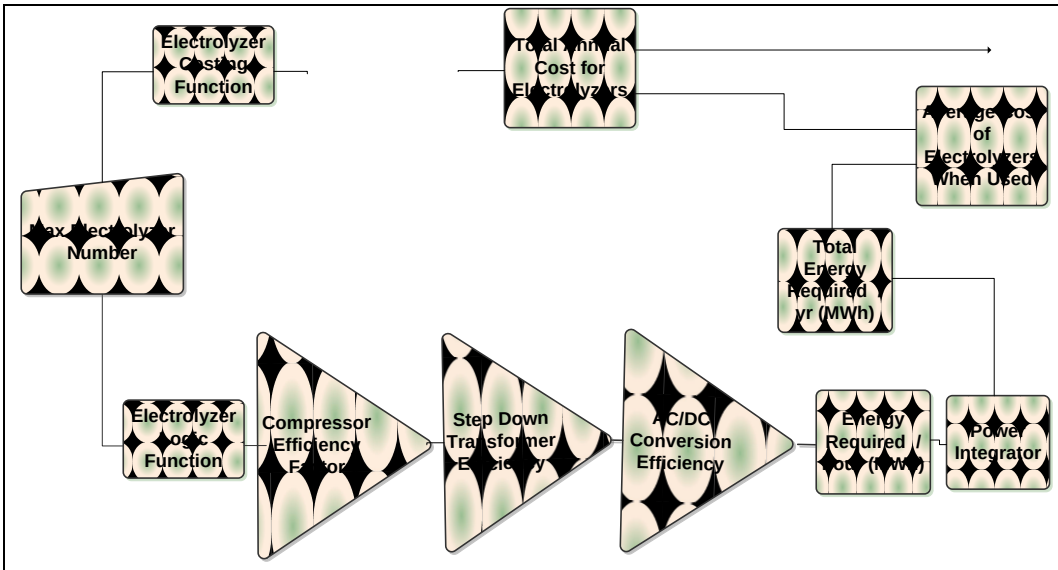

Figure 46: Process Flow Diagram of the Electrolyzer Costing Model

Table 28 provides a summary of all the parameters used for the electrolyzer model.

Table 28: Summary of all Parameters for Electrolyzers

Parameter	Units	Source
Electrolyzer Running Capacity Range	40% - 100%	(Hydrogenics Corp, 2009)
Standby Possible (0.% Power)	Yes	(Hydrogenics Corp, 2009)
Power Consumed	5.2 kWh / Nm^3 H_2 produced	(Hydrogenics Corp, 2009)
Max Hydrogen Generated	960 Nm^3 / h	(Hydrogenics Corp, 2009)
Hydrogen Output Pressure	1 MPa	(Hydrogenics Corp, 2009)
1 MPa to 25 MPa Compressor Efficiency Factor for Tank Storage	0.80	(Peters, Timmerhaus et. al, 2004, p. 529)
1 MPa to 7 MPa Compressor Efficiency for Underground Storage	0.85	(Peters, Timmerhaus et. al, 2004, p. 529)

Step Down Transformer Efficiency	0.98	(Consortium for Energy Efficiency, 2000)
AC/DC Inverter Efficiency	0.95	(Navigent Consulting, 2006)
Electrolyzer Life Span	20 years	(Ramsden, 2008)
Electrolyzer Refurbishment Cost	30% of Capital Cost / every 10 years	(Ramsden, 2008)
Electrolyzer Operating and Maintenance Cost	7% of Capital Cost	(Ramsden, 2008)
Electrolyzer Total Installed Capital Cost	2005 US $ 2,479,950 / max 485 Nm^3 H_2 Generation System	(Ramsden, 2008)

-

3.2.6 Fuel Cell Model

Figure 47 outlines the process flow diagram to determine the power generated from fuel cells. Polymer Electrolyte Membrane (PEM) fuel cell was chosen for the hub because of its low temperature operation to take advantage of high-heating value of hydrogen, and high efficiency. The fuel cell was modelled around the parameters obtained from Hydrogenics Inc. The Hy-PM HD-XR 2009 fuel cell stack was considered as a representative fuel cell stack performance for this model. The parameters for the stack are listed in Table 29. When the power supplied from various sources is less than the power demand for a given hour, fuel cells are used to generate the power needed to fulfil the hourly power demand by converting hydrogen into electricity using oxygen from air. While the power function for fuel cell stacks also consider the minimum power required for electrolyzers while on standby, it was stated by Hydrogenics Inc. that such power requirements are negligible. Since the maximum amount of power from each fuel cell stack is 16.5 kW, the power needed from fuel cells each hour (in kW) is divided by 16.5 kW to obtain the number of fuel cell stacks needed for the specified hour. The maximum number of fuel cell stacks needed for a specified hour throughout the year is used to calculate the annual capital costs for fuel cell stacks. Since the maximum number of electrolyzers was bounded, the maximum number of fuel cell stacks is unbounded in order to

ensure electricity grid demand is met. It is assumed that the fuel cell stacks are arranged in parallel. Therefore, the outgoing voltage for the fuel cell system is assumed to be the same as that of a single fuel cell stack. As a result, a step up transformer is needed to convert the voltage of the output power from fuel cells from roughly 50 V to 500 kV. Since these transformers have an efficiency of 98% (Consortium for Energy Efficiency, 2000), the power needed function is divided by the transformer efficiency to ensure enough power is created by fuel cells to meet electricity grid demand.

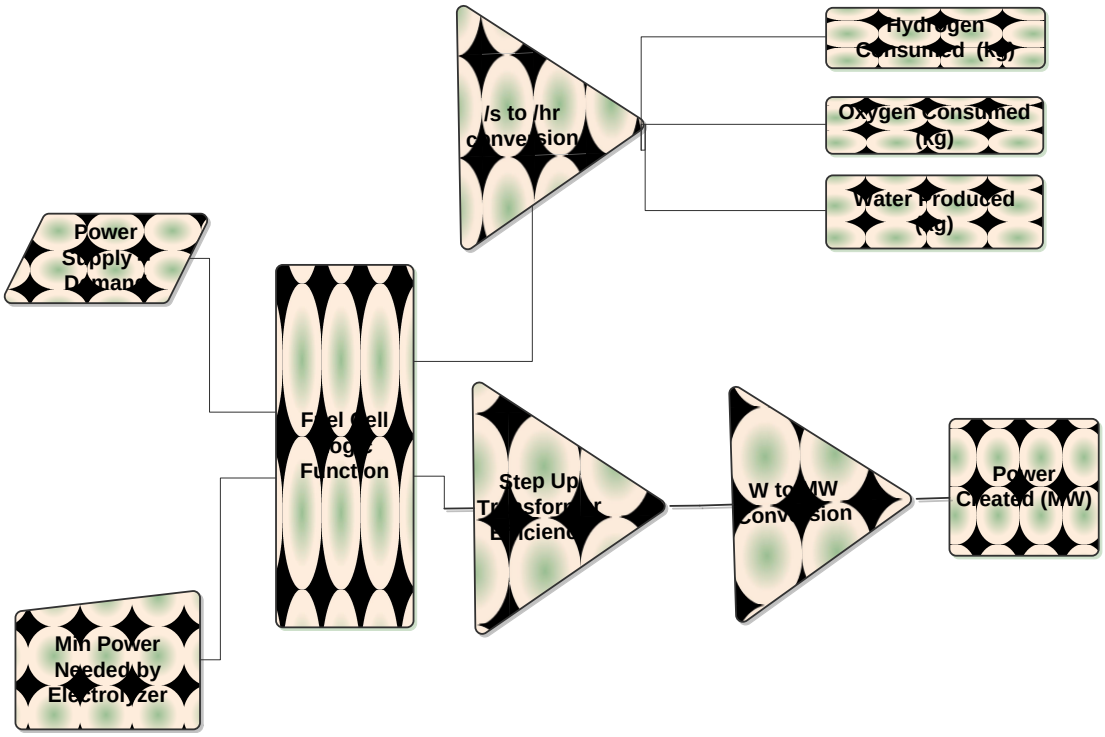

Figure 47: Process Flow Diagram of Fuel Cell Electricity Generation Model

Table 29: Fuel Cell Properties Used to Estimate Model Parameters

Parameter	Value	Source
Fuel Cell Voltage Range	40 – 80 V	(Hydrogenics Corp, 2009)
Fuel Cell Maximum Current	350 A	(Hydrogenics Corp, 2009)
Fuel Cell Efficiency Factor	0.53	(Hydrogenics Corp, 2009)
Fuel Cell Maximum Power per Stack	16.5 kW	(Hydrogenics Corp, 2009)

In order to convert hydrogen to electricity, one mole of hydrogen and half a mole of oxygen are converted into one mole of water. Therefore, for every one kg of hydrogen consumed, 8 kg of oxygen is consumed, and 9 kg of pure water is produced. This is taken into consideration for determining net oxygen and water balance for the hub.

Figure 48 represents the process flow diagram to determine the annual costs of a fuel cell system. Since a fuel cell stack lasts 20,000 hours of operation, the operating life of the fuel cell stack is determined by the following equation:

$$Operating\ life\ of\ fuel\ cell = \frac{20{,}000\ hours}{\#\ of\ hours\ of\ fuel\ cell\ operation\ each\ year} \tag{30}$$

However, it is also assumed that fuel cell systems are not designed to last more than 12.5 years. Therefore, if the fuel cell stacks are operated for less than 1600 hours each year, the operating life is assumed to be 12.5 years. The parameters for calculating annual fuel cell costs are listed in Table 30. The equations for capital costs, fixed operating costs, and variable operating costs are as follows:

$$\begin{aligned} &Annual\ Capital\ Costs \\ &\quad = (Max\ number\ of\ fuel\ cell\ stacks \\ &\quad * \frac{\max power\ per\ stack\ (kW) * capital\ cost\ (\$)\ per\ kW * 1.05^{operating\ \ life * 0.46})}{Operating\ life} \end{aligned} \tag{31}$$

$$\begin{aligned} &Annual\ Fixed\ Operating\ Costs \\ &\quad = (Max\ number\ of\ fuel\ cell\ stacks * \max power\ per\ stack\ (kW) \\ &\quad * fixed\ yearly\ operating\ cost\ (\$)\ per\ kW) \end{aligned} \tag{32}$$

$$\begin{aligned} &Annual\ variable\ operating\ costs \\ &\quad = Power\ generated\ by\ fuel\ cells\ each\ hour\ (kWh) \\ &\quad * \ Cost\ (\$)\ per\ kWh \end{aligned} \tag{33}$$

The total yearly costs are then divided by the total yearly power generated by fuel cells, and the number of hours the fuel cells were operating throughout the year to determine the cost per MWh.

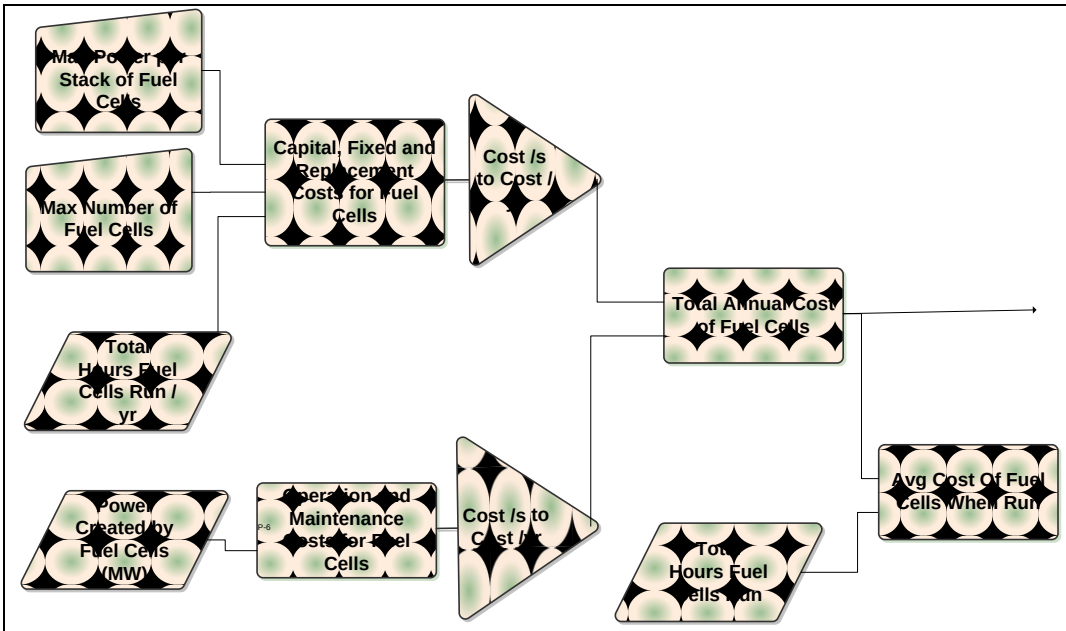

Figure 48: Process Flow Diagram of Fuel Cell Cost Model

Table 30 outlines all the parameters considered for modelling the fuel cell system.

Table 30: Summary of all Parameters for Fuel Cell

Parameter	Value	Source
Fuel Cell Voltage Range	40 – 80 V	(Hydrogenics Corp, 2009)
Fuel Cell Maximum Current	350 A	(Hydrogenics Corp, 2009)
Fuel Cell Efficiency Factor	0.53	(Hydrogenics Corp, 2009)
Fuel Cell Maximum Power per Stack	16.5 kW	(Hydrogenics Corp, 2009)
Fuel Cell Capital Cost	US $ 1500 / kW capacity	(US DOE, 2007)
Fuel Cell Life Span	5 years	Assumed based on 20000 hour life capacity
Fuel Cell Total Operating Hours	20,000 hours	(US DOE, 2007)

Fuel Cell Fixed Operating Cost	US $ 5.65 / kW capacity	(Energy Information Administration, 2009)
Fuel Cell Variable Operating Cost	US $ 0.04792 / kWh generated	(Energy Information Administration, 2009)

3.2.7 Gas Storage Model

There are two types of storage considered for hydrogen: Underground Storage, and Storage in Tanks. No limit was set for the maximum capacity of either the underground storage or the tanks. The logic flow diagram for considering the method of storage is illustrated in Figure 49.

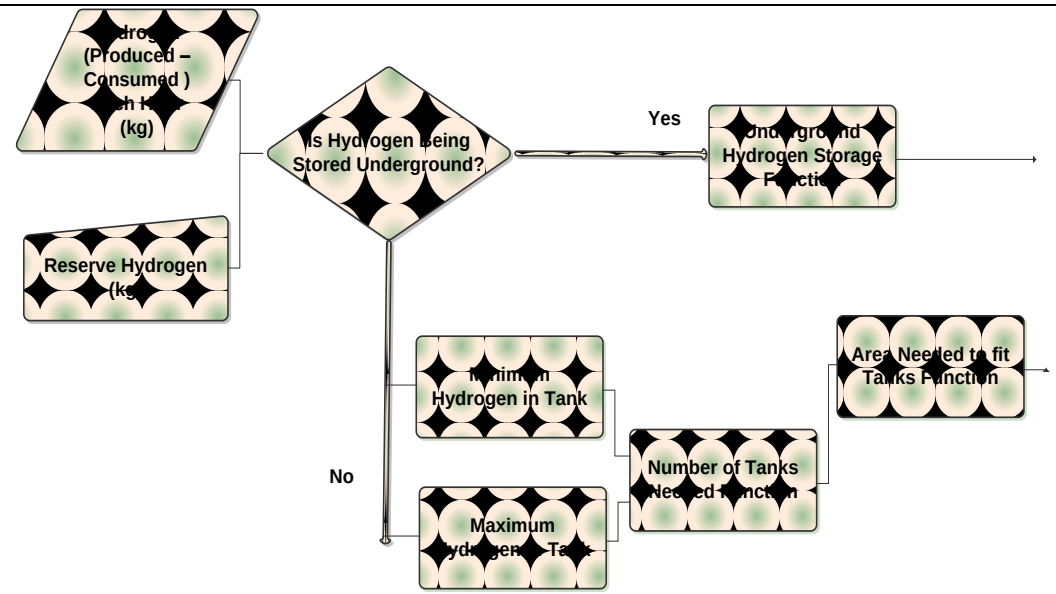

Figure 49: Logic Flow Diagram for Hydrogen Storage

Underground Storage Model (Mined Caverns)

Underground salt formations are the preferred option for hydrogen Storage primarily because these formations are well suited to gas storage in that salt caverns, once formed, allow little injected gas to escape from the formation unless specifically extracted. The walls of salt caverns also have the structural strength of steel, which makes it very resilient against reservoir degradation over the life of the storage facility. The model of the salt cavern uses a variable-pressure system. The variable pressure system is a closed system in which storage pressure is determined by the amount of gas stored in the cavern, compressors and pressure valves which have been included into the costing.

Injection- Withdrawal Cycles

There is no set injection-withdrawal cycle for hydrogen in this model. When the supply is greater than demand, i.e. excess electricity available, then hydrogen is injected into the cavern. When the demand is greater, then hydrogen is withdrawn.

Costing per Kg gas at Different Pressures

Since very little real field data is available on hydrogen underground storage, most of the underground storage research is based on the 1971 article "Underground Hydrogen Storage" published by US Department of Energy. The costs have been changed to take into consideration inflation and converted to Canadian Dollars. A reserve of 200,000 kg of hydrogen is maintained in the cavern at all times. The levelized cost of service was obtained from similar natural gas storage mines in operation. This data was used to obtain a levelized operation and maintenance cost for a $CAD per 10^6 Btu (mmBTU). For the cavern, the base-case plant cost and operating costs for hydrogen storage were assumed to be the same as the costs for natural gas storage. The cavern was assumed to be at a depth of 3500 ft. The base volume was 1.903 x 10^6 ft^3 at a temperature of 77 C. The high cost of service is due to the high development cost of the field. With this assumption, the amount of throughput of the field is calculated to be 2.03 x 10^{12} Btu/yr (Foh et al., 1971). The assumptions are listed in table 31.

Table 31: Summary of the Excavated Cavern Natural Gas Storage Costs and Assumptions

Item	Base Case
Erected Plant Cost, $\$10^3$	50,000
Annual Throughput, 10^{12} Btu	2.03
Annual Operating Cost, $\$10^3$	425
Construction Time, yr	3
Cost of Debt, %	10
Cost of Equity, %	15
Fraction Debt Financed	0.6
Storage Lifetime for Economics, yr	27
Cost of Service, $\$/10^6$ Btu	5.27

From this data, the cost of service was calculated to be $ 5.27 per mmBTU. Compressors, valves and other equipment including leak detectors have been considered into the prices.

Since 1 kg of Hydrogen has an energy density of 142 MJ (higher heating value), the service cost of underground storage is calculated as follows:

$$Cost\ of\ Service\ (1978\ US\ \$) = 5.27 \frac{\$}{10^6 Btu} * \frac{10^6 Btu}{1055.0558} MJ * 142 \frac{MJ}{kg} \tag{34}$$

$$= 0.709\ \$/kg$$

Accounting for inflation since 1978 and converting to Canadian Dollars gives cost to around $2.035 per kg of hydrogen. This price is used to calculate the total cost of hydrogen storage later.

Storage Capacity

According to a study done at Nanticoke due to the sandstone present near Nanticoke, there exists underground storage geology capable of holding about 400 million tonnes of CO_2 at 7 MPa. There is capacity for storing an additional 130 million tonnes of CO_2 located to the north west of Nanticoke (Shafeen et al., 2004). This provides for a potential capacity of 18 million tonnes of hydrogen storage at the first site, and 5 million tonnes of hydrogen storage at the second site. Although it is uncertain how much of this can be utilized, even using 50 million tonnes is enough for our hydrogen storage needs. It should also be noted that not all of the hydrogen will be stored; most of the hydrogen will be withdrawn and used for industries and transportation.

Tank Storage Model (High Pressure Tanks)

The two classic problems for commercial deployment of hydrogen technologies have been the development of an economical high performance fuel cell stack, and a hydrogen storage system that is both lightweight and economical and could be integrated with the fuel cell to supply hydrogen as required by the fuel cell stack. (Ward et al., 1993) (Zittel & Wurster, 1996)

Although there are newer hydrogen tanks that can withstand up to 10,000 psi, these technologies are new and would need more testing in real life applications. The hydrogen from the electrolyzer is produced at 1 MPa and hence must be compressed before being stored in the

tanks. For this work, a hydrogen pressure vessel manufactured by CP Industries was chosen as the tank to base the storage tank model on. A quote was received for this pressure vessel, the details of which are as listed in Table 32.

Table 32: A summary of the Quotes given by the CP Industries on their hydrogen pressure vessel.

Item	Quote
Dimensions	24” OD x 1/154”MW x 20’ L
Tank Water Volume	46.4 cubic feet
Hydrogen stored in ideal pressure	23.3 normal kg hydrogen at 3600 psi
Price	US$ 20,000

To find the amount of hydrogen in tank, we need to consider the efficiency loss, the energy needed by the compressor as well as the pressure and size of the tank. A large cost for on-ground hydrogen storage comes from the energy required for the compression. Another major factor is the efficiency loss.

Small compressors may have efficiencies as low as 40%-50%, whereas larger alternating, double-action compressors may have efficiencies in the 65%-70% range (Zittel & Wurster, 1996; Cuoco et al., 1995). Modern compressors have higher efficiencies of around 80 – 85% depending on the amount of compression involved (Peters et. al, 2004). The energy to compress hydrogen from 0.1 to 15-20 MPa (14.5 psig to 2,100-2,800 psig) can be 8%-10% of the energy content of the hydrogen. (Cuoco et al., 1995).

Assuming the energy to compress hydrogen is 10% and the efficiency is 80%, the amount of hydrogen in a tank is:

$$Amount(kg) of\ Hydrogen\ per\ tank \tag{35}$$
$$= 23.3\left(\frac{kg}{MPa - Tank}\right) * \frac{3600psi}{145.0377\frac{psi}{MPa}}$$
$$* \frac{90}{100}(energy\ required\ by\ compressor)$$
$$* \frac{80}{100}(efficiency\ loss) = 400.95\frac{kg}{tank}$$

Hydrogen Storage Costs

For our costing, the CP Industries' quoted tank will be used. Assuming a 5% Rate of Interest and a 10 yr life span,

$$Levelized\ Yearly\ Cost\ of\ tank\ = \frac{20{,}000 * 1.05^{4.6}}{10} \tag{36}$$
$$= \$\ 2503.23\ per\ tank$$
$$Yearly\ Cost\ of\ Tank\ Storage\ per\ Hydrogen$$
$$= 2503.23\frac{\$}{tank} * \frac{1}{400.95\frac{kg}{tank}} = \$\ 6.24\ /\ \text{kg}$$

Converted to Canadian Dollars, this gives $ 6.87 per kg of hydrogen.

Compressor Capital Costs

Compressor costs are based on the amount of work done by the compressor, which depends on the inlet pressure, outlet pressure, and flow rate. Reciprocating compressors are most commonly used for hydrogen applications, but centrifugal compressors are also an option. Reciprocating compressors cost about 50% more than a comparable centrifugal compressor, but have higher efficiencies (Timmerhaus & Flynn, 1989).

The capital costs of both types of compressors have a sizing exponent of 0.80. High operating pressures also add to the cost of a compressor (Garrett, 1989).

Table 33 gives some examples of compressor costs. The prices are $ 650 - $ 6,600 per kW ($440-$4,900 per hp); the larger compressors are several times cheaper on a unit basis than smaller ones.

Table 33: Capital Costs of Compressors

Size (kW)	Cost ($)	Cost ($/kW)	Source
10	n/a	6600	(Zittel & Wurster, 1996)
75	180000	2400	(Taylor et al., 1986)
250	n/a	$660-$990	(Zittel & Wurster, 1996)
2,700	$2,330,000	$863	(Taylor et al., 1986)
3,700	$2,440,000	$650	(Taylor et al., 1986)
4,500	$3,160,000	$702	(Taylor et al., 1986)
28,300	$20,000,000	$702	(TransCanada Pipelines, 1996)

Since the energy hub requires a lot of hydrogen to be compressed, the 28,300 kW size will be taken into consideration. Assuming the size we require will have the same cost per kW of $ 702 per kW, the capital costs for the compressor is calculated.

Assuming 1 kg of Hydrogen gives us 142 MJ,

$$1\ kg\ of\ Hydrogen = (142 * 10^6)J * \frac{1W}{3600J} * \frac{1kW}{1000W} = 39.72\ kW \tag{37}$$

The cost per kW for the compressor at $ 702 per kW when adjusted for inflation (since 1995) and converted to Canadian dollars gives $ 1079.99 per kW. The cost per kg of hydrogen is calculated as follows:

$$Compressor\ Capital\ Cost\ \left(\frac{\$}{kg}\right) = \frac{1079.99\$}{kW} / 39.72\frac{kW}{kg} = 27.19\frac{\$}{kg} \tag{38}$$

Annual price of 1 kg of hydrogen, assuming a 22 yr lifespan for the compressor and an interest of 5% yields:

$$Compressed\ Capital\ Cost\ per\ kg - year = 17.67 * \frac{1.05^{22*0.46}}{22} \tag{39}$$

$$= 2.025\frac{\$}{yr - kg}$$

The total capital and operating costs for compressor and storage is 2.025 + 6.87 = $ 8.895 per kg-yr

Tank Storage Capacity

Figure 50 outlines the logic flow diagram for determining the mode of hydrogen storage. The minimum and maximum hydrogen stored in tank for the whole year is measured, and the number of tanks needed is obtained by dividing the amount of peak hydrogen in storage by the tank capacity as obtained from equation 40.

$$Amount(kg) of\ Hydrogen\ per\ tank \tag{40}$$

$$= 23.3\ (\frac{kg}{MPa - Tank}) * \frac{3600psi}{145.0377\frac{MPa}{psi}}$$

$$* \frac{90}{100}(energy\ required\ by\ compressor)$$

$$* \frac{80}{100}(efficiency\ loss) = 400.95\frac{kg}{tank}$$

Since a lot of tanks are required for the hub, the area needed for the tanks is a sizeable amount and must be found out. This area only includes the physical horizontal space required as these tanks are stood vertically. The area is calculated as:

$$Area\ Needed\ For\ All\ Tanks = Area\ Needed\ For\ Each\ Tank * Number\ of\ Tanks \tag{41}$$

$$Area\ needed\ for\ each\ tank = \pi * \left(\frac{24}{2} inches * 2.54 \frac{cm}{inches} * \frac{1}{100} \frac{m}{cm}\right)^2 \quad (42)$$
$$= 0.2919\ m^2$$

The model takes into account the total number of tanks needed and multiplies it with 0.2919 to give the total area required for the tanks. The costing for the model is based on the method of storage used.

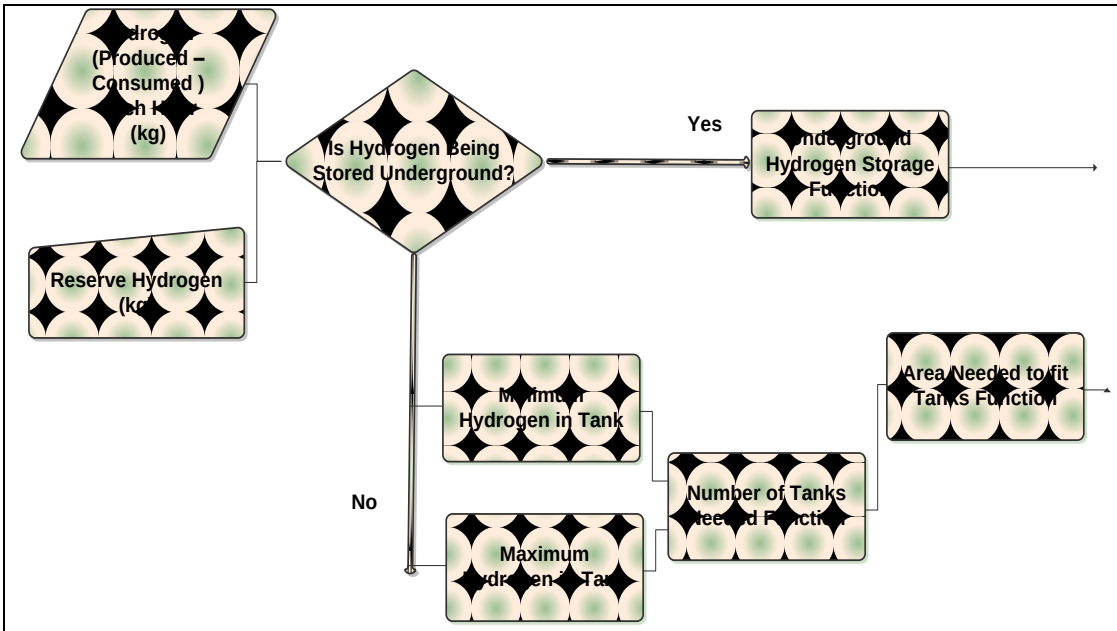

Figure 50: Logic Flow Diagram for Hydrogen Storage

The process flow diagram for the hydrogen storage costs is illustrated in Figure 51.

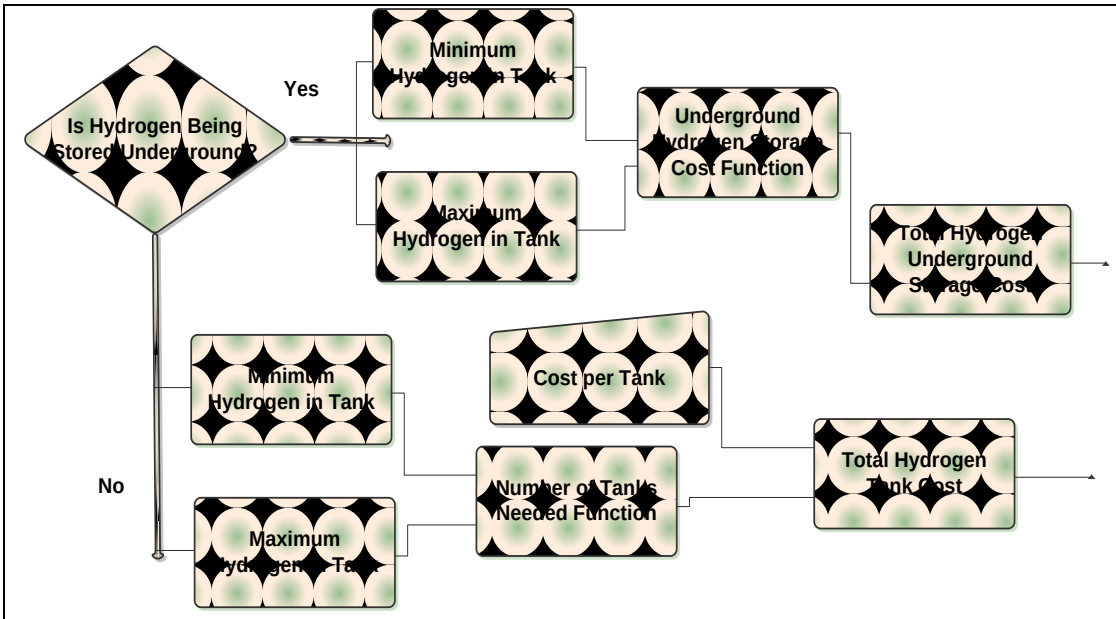

Figure 51: Process Flow Diagram for Costing of Storage Tanks

The model checks to see what method of storage is currently in use. It then calculates the difference in hydrogen amount for the whole year and uses the costing function of the storage (Timmerhaus & Flynn, 1989) method, i.e. $ 2.035 per kg for underground mines or $ 8.895 per kg for on-ground storage tanks.

Summary Chart of Parameters

Table 34 provides a summary of parameters obtained and used for estimating the size and the cost of storage methods.

Table 34: Summary Chart of Parameters for Hydrogen Storage

Parameter	Value	Source
Storage Tank Life	10 yrs	Quote from CP Industries
Storage Tank Pressure	3600 psi	Quote from CP Industries

Compressor Life	22 yrs	(Amos, 1998)
Compressor Cost	$ 702 / kW	(TransCanada Pipelines, 1996)
Tank Dimensions	24” OD x 1/154”MW x 20’ L	Quote from CP Industries
Tank Price	$ 20,000	Quote from CP Industries
Compressor efficiency	80%	(Peters et. al., p. 529, 2004)
Compressor Energy required	10% of Hydrogen energy	(Cuoco et al., 1995)
Construction Time for Excavated Cavern	3 yrs	(Foh et al., 1971)
Cost of Debt, %	10	(Foh et al., 1971)
Cost of Equity, %	15	(Foh et al., 1971)
Fraction Debt Financed	0.6	(Foh et al., 1971)

Underground Mine Operating Life	27 yrs	(Foh et al., 1971)
Compressor Interest Rate	5%	Assumed
Storage Tank Interest Rate	5%	Assumed
Energy Content of Hydrogen	142 MJ / kg	(Bossel & Eliasson, 2003)
Underground CO_2 Storage Capacity for Nanticoke Area	550 Million Tonnes	(Shafeen et al., 2004)

3.2.8 Gas Revenue

The process flow diagram for calculating hydrogen demand is outlined in Figure 52. While it is expected in some scenarios that the amount of hydrogen required by fuel cells may be greater than that available in hydrogen storage, the model is programmed to meet grid electricity demand at all times. Therefore, if a situation arises when hydrogen in storage is less than hydrogen demand, hydrogen is purchased from industry at the current hourly price for pure hydrogen from renewable resources. This ensures that grid electricity demand is always met. The difference between net hydrogen stored in tank and reserve hydrogen is calculated as the excess hydrogen available. Given the demand for future hydrogen economy is not known, it is assumed that at the end of the year, 50% of the excess hydrogen is sold to industry, while the rest is sold to transportation sector at the year-end industrial hydrogen, and hydrogen for transportation prices.

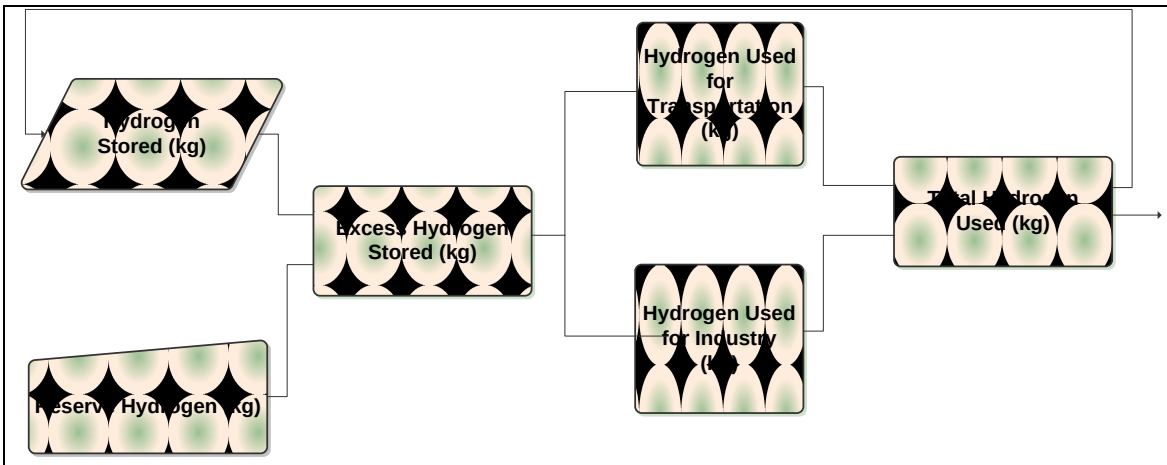

Figure 52: Process Flow Diagram For Hydrogen Demand

Figure 53 outlines the process flow diagram to determine yearly hydrogen revenue. The price for hydrogen for transportation is based on current gasoline prices. Based on data obtained from Energy Information Administration (EIA), the price of gasoline was analyzed between periods 1983-2001, and 2001-2009, where the gasoline price growth rates were calculated at 1% and 6.7% per year respectively (EIA, 2009). Therefore, it was estimated that gasoline prices would increase by roughly 3.85% per year over the next 20 years. It is also assumed based on current provincial tax system that 30% of the hydrogen price will be charges in taxes (GasBuddy Inc, 2009). In addition, since fuel cells are 40% efficient as opposed to gasoline Internal Combustion Engines (ICE) which are 23% efficient, and that 1 kg of hydrogen has roughly 4.4 times the energy density of 1 litre of gasoline, the gasoline price to hydrogen for transportation price conversion is calculated as follows:

$$Hydrogen\ price\ per\ kg\ for\ transportation \tag{43}$$
$$= gasoline\ price\ per\ liter * \frac{fuel\ cell\ efficiency}{ICE\ efficiency}$$
$$* \frac{hydrogen\ energy\ density\ in\ MJ\ per\ kg}{gasoline\ energy\ density\ in\ MJ\ per\ liter} * 0.7 * 1.0385^{20*0.46}$$

Based on a quote provided by Chris Kassell from Air Liquide, the price for industrial hydrogen varies between \$150 and \$300 for an 8 m^3 tank at 2500 psi. If an average price of \$225 is assumed, this works out to \$ 2.02 per kg hydrogen when natural gas price is at \$7 per mmBTU.

Since more than 95% of hydrogen is obtained from natural gas, it is assumed that the final price of hydrogen is closely linked to the price of natural gas. On analyzing natural gas price data from EIA from years 1983 to 2001, and 2001 to 2009, the price growth rates were found to be 2.31% and 8.27% respectively (EIA, 2009). Therefore, the average price growth rate over the next 20 years was estimated to be 5.29% per year. Therefore, the natural gas price to hydrogen for industry price conversion was calculated as follows:

$$Hydrogen\ price\ for\ industry = natural\ gas\ price\ per\ mmBTU * \frac{\$\ 2.02\ per\ kg\ hydrogen}{\$7\ per\ mmBTU\ natural\ gas} * 1.0529^{20*0.46} \quad (44)$$

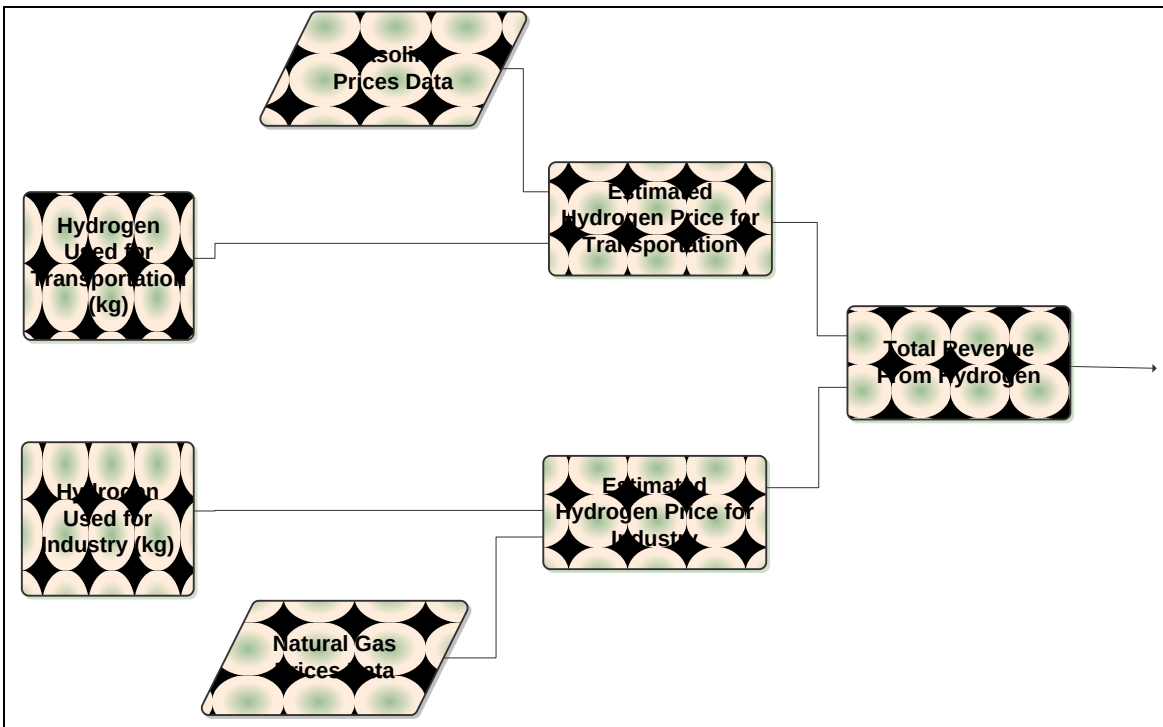

Figure 53: Process Flow Diagram for Determining Total Hydrogen Revenue

Based on a quote provided by Chris Kassell from Air Liquide, the price for oxygen varies between \$125 and \$275 for an 8 m^3 tank at 2500 psi. If an average price of \$200 is assumed,

this works out to $ 0.1123 per kg oxygen. It is assumed that there is no price variation for oxygen throughout the year for the model. The hourly gasoline and natural gas price variation charts are available in Appendix E.

Summary Chart of Parameters

Table 35 outlines the summary of all the parameters used to obtain the total revenue from gases.

Table 35: Summary of Chart of Parameters for Gas Revenue

Parameter	Value	Source
Gasoline Price Data		(EIA, 2009)
Natural Gas Price		(EIA, 2009)
Oil Energy Content (LHV)	32 MJ / litre	(US DOE, 2009)
Hydrogen Energy Content (HHV)	141 MJ / kg	(US DOE, 2009)
Internal Combustion Engine Efficiency	23%	(US DOE, 2009)
Fuel Cell Efficiency	40%	Assumed
Natural Gas Price to Industrial Hydrogen Price Efficiency Factor	(2.02/7) $ / kg H_2	Air Liquide Quote
% Tax on Gasoline	30%	(GasBuddy Inc, 2009)
Oxygen Price	$0.1123 / kg	Air Liquide Quote

3.2.9 Electricity Demand and Total Revenue

Hourly Electricity Demand

Figure 54 outlines the process flow diagram to determine the total hub electricity demand. The total hub electricity demand consists of the grid electricity demand, and Nanticoke's share of electricity demand from plug-in hybrid vehicles. The grid electricity demand is obtained from IESO, and is assumed to be similar to the current grid electricity demand met by existing coal

plants. However, it is anticipated that with changes in the Ontario grid, and closure of other plants in Ontario, as well as population changes, surely demand from this key transmission link will change.

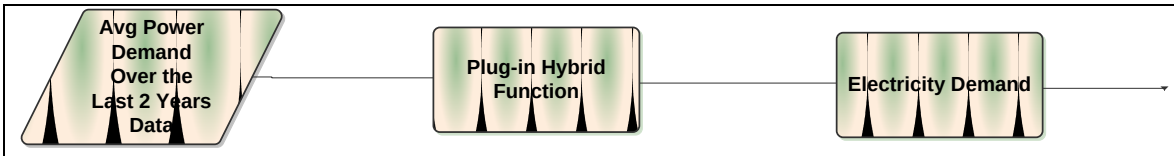

Figure 54: Process Flow Diagram for Determining Total Electricity Demand

The parameters used to obtain the hourly power requirements for plug-in hybrid vehicles in GTA are outlined in Table 36. Given there are roughly 19 million light vehicles in Canada, the total number of light vehicles in Greater Toronto Area (GTA) was estimated by dividing the total number of light vehicles in Canada by the population of Canada, and multiplying it to the population of GTA. Since Ontario is planning for a 5% penetration of plug-in hybrid vehicles by 2020, it was assumed that metropolitan areas such as GTA would have twice the penetration rate of 10%. The total number of light vehicles in GTA was multiplied by 0.1 to determine the total number of plug-in hybrid vehicles in GTA by 2020. If it is assumed that plug-in hybrids run on electricity for 60 kilometres for each overnight charge, the annual number of kilometres travelled by a car on electricity if the car is run for 60 kilometres a day, 5 days a week, for 50 weeks a year, comes to 15,000 kilometres a year. Since an average car in metropolitan regions travel 20,000 kilometres a year given cars in Canada are warranted for 20,000 kilometres a year, roughly 75% of the annual power demand of a car is assumed to be met by electricity from the grid.

Since an average vehicle consumes 10.5 litres of gasoline per 100 kilometres travelled, this works out to 336 MJ of gasoline energy for every 100 kilometres travelled as gasoline has an energy density of 32 MJ per litre. However, since batteries are 80% efficient as opposed to IC engines which are 23% efficient, the equivalent amount of electrical energy needed to propel a vehicle for 100 kilometres is 96.6 MJ. This number is then multiplied by the annual kilometres travelled by the vehicle on electrical energy (15000 kilometres), 14490 MJ or 4.025 MWh of electrical energy is needed per year per plug-in hybrid vehicle. Multiplying this number by the

total number of plug-in hybrid vehicles in GTA results in 1,263,493 MWh of energy needed per year for all plug-in hybrid vehicles in GTA. If it is assumed that vehicles are primarily charged overnight during weekdays, 50 weeks a year, dividing the total power needed by 250 results in 5054 MWh of energy needed each day for all plug-in hybrid vehicles. Furthermore, if it is assumed that this energy is supplied at a steady rate during an 8 hour period from 10 pm to 6 am, the power needed to supply GTA plug-in hybrids is 632 MW. Since the electricity capacity available at Nanticoke represents roughly 13.3% of the total power capacity in Ontario as outlined by IESO, the hub is required to supply roughly 84 MW of constant power from 10 pm to 6 am. This is the estimated electricity demand from the hub for plug-in hybrid vehicles in GTA by 2020.

Total Revenue for Hub

Figure 55 outlines the components that make up the total revenue for the hub. Electricity revenue is calculated from the Hourly Ontario Energy Price data obtained from IESO. The hourly price data for years 2003 through 2009 were averaged to estimate the energy price for each hour of the year. The net electricity supplied to the grid each hour is multiplied by the price of energy each hour to obtain the total yearly electricity revenue ($ per year). Similarly, the total yearly revenue from hydrogen sold to industry and transportation sector are calculated as outlined in section 3.2.8, and the total yearly revenue (costs averted) from emissions is calculated, where the costs for each pollutant from electricity and transportation sources are outlined in section 3.2.10.

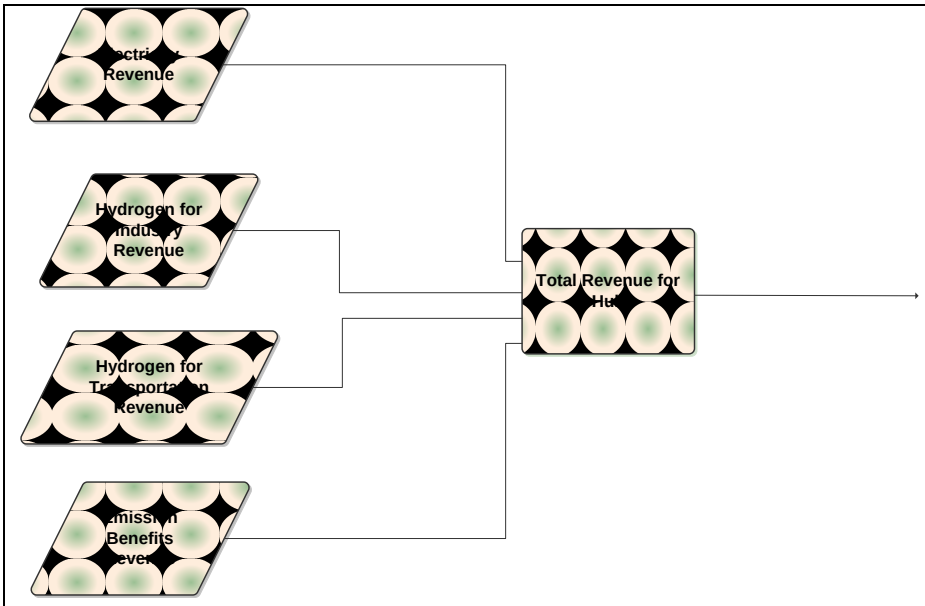

Figure 55: Summary of all Hub Revenue Sources

Table 36: Summary of all Parameters for Estimating Electricity Demand

Parameter	Units	Source
Hourly Ontario Energy Price (HOEP)	$ / MWh	Obtained from IESO for years 2007-2009
Number of Light Vehicles in Canada	19000000	(Transportation in Canada, 2008)
Estimated Population of Canada	32626363	(Statistics Canada, 2008)
Population of GTA	5390412	(Statistics Canada, 2008)
Fraction of Plug-In Hybrids in Ontario by 2020	0.05	(Nichols, 2009)
Typical Car Gasoline Consumption	10.5 litres / 100 km	(Natural Resources Canada, 2009)
# of Kilometres Driven by Average Car in GTA	20000 kilometres / yr	Assumed

Efficiency of Plug In Batteries	80% (Assumed year-round average)	(Kim et al., 2008)
Fraction of Electricity Supplied to GTA by Nanticoke GS	0.133	(IESO, 2009)

3.2.10 Environmental Emissions and Revenue

Figure 56 outlines the process flow diagram for calculating total emissions. Table 37 outlines the total emissions from Nanticoke coal plant, and the corresponding annual emissions per MW of coal power generated.

Table 37: Annual Emissions from Nanticoke Coal Power Plant (Environment Canada, 2008)

Substance	Tonnes (2007)	Average MW Generation in 2007	kg/Year-MW
Sulphur dioxide	67,423	2,081	32392.245
Carbon monoxide	6,890	2,081	3310.184
Carbon dioxide	17,109,536	2,081	8221785.60
Oxides of nitrogen (expressed as NO2)	22,376	2,081	10750.172
Volatile Organic Compounds (VOCs)	47	2,081	22.580
PM - Total Particulate Matter	4,235	2,081	2034.634
PM10 - Particulate Matter <= 10 Microns	1,737	2,081	834.512
PM2.5 - Particulate Matter <= 2.5 Microns	609	2,081	292.584
Dioxins and furans - total	0.174	2,081	0.084

Arsenic (and its compounds)	0.723	2,081	0.347
Other Heavy Metals (Cobalt, Copper, Chromium and its compounds)	8.988	2,081	4.318
Lead (and its compounds)	0.681	2,081	0.327
Mercury (and its compounds)	0.152	2,081	0.073
Cadmium (and its compounds)	0.023	2,081	0.011
Hydrochloric acid	1,495	2,081	718.247
Aluminium (fume or dust)	0.385	2,081	0.185
Hydrogen fluoride	252	2,081	121.069

The typical model for a vehicle is assumed to be a 2009 Chevrolet Impala. All emissions for this car are based on the current Ontario electricity grid composition. Table 38 outlines the current Ontario grid composition:

Table 38: Ontario's Energy Mix (Ontario Power Authority, 2007)

Source	**Capacity** (MW)	**% of Total Capacity**
Hydroelectric	7788	24.9
Coal	6434	20.6
Nuclear	11419	36.6
Gas	5103	16.3
Wind	395	1.3
Biomass	75	0.24
Total	**31214**	

Using the software Greenhouse Gases, Regulated Emissions, and Energy Use in Transportation Model (GREET) version 1.8c, the amount of emissions per km were obtained as outlined in Table 39.

Table 39: Emissions of Vehicles in Grams per Mile based on Current Ontario Electricity Demands

Emission Type	Amount in Grams / mile
CO_2 (with C in VOC and CO)	377
CH_4	0.015
N_2O	0.012
GHGs	381
VOC Total	0.180
CO Total	3.745
NO_x Total	0.141
PM_{10} Total	0.029
$PM_{2.5}$ Total	0.015
SO_x Total	0.006

Since a typical automobile is expected to consume 1 kg of hydrogen for every 42-56.5 miles travelled, the above table can be converted into emissions averted per kg of hydrogen when an automobile running on fuel cells is chosen over those running on gasoline. These are outlined in table 40.

Table 40: Emissions Averted by Vehicles running on Fuel Cells instead of Gasoline

Emission Type	Amount in kilograms / kg
CO_2 (with C in VOC and CO)	18.567
CH_4	0.000739
N_2O	0.000591
GHGs	18.764
VOC Total	0.00887
CO Total	0.184

NO_x Total	0.00694
PM_{10} Total	0.00143
$PM_{2.5}$ Total	0.000739
SO_x Total	0.0002955

Emissions Averted for Industrial Hydrogen

Demand for industrial hydrogen gas is currently being primarily met through steam reforming of natural gas. Table 41 outlines the emissions obtained from natural gas plants.

Table 41: Emissions from a Typical Natural Gas Plant (EIA, 2009)

Emission Type	Amount in lbs / billionBTU energy input
CO_2	117,000
CO	40
NO_x	92
SO_x	1
Total PM	7

Since production of hydrogen through steam reforming is 65-75% efficient (Hydrogen Production: Steam Methane Reforming. 2005), and hydrogen gas has energy content of 143 MJ per kg, the above table can be modified to obtain emissions per kg of hydrogen produced from natural gas, as outlined in Table 42 as per the following conversion calculation:

$$1000000\ BTU * \left(\frac{1.05435}{1000000}\right)\left(\frac{MJ}{BTU}\right) * \frac{1}{143}\left(kg\ \frac{Hydrogen}{MJ}\right) * 0.7 = \frac{5160\ kg\ hydrogen}{billion\ BTU} \quad (45)$$

1 kg = 0.448 lbs

Table 42: Emissions for Hydrogen Obtained from Natural Gas

Emission Type	Amount in kg / kg Hydrogen
CO_2	10.158
CO	0.003473
NO_x	0.007988
SO_x	0.000608
Total PM	0.000087

Figure 57 outlines the process flow diagram for estimating the total costs for carbon dioxide, and other air pollutants.

CO_2 Costs

CO_2 pricing has been sensitive to both the social impacts of inaction, and the costs required for investing in technologies needed to reduce CO_2 emissions. While one option is to switch to more renewable and less carbon intensive resources, Carbon Capture and Storage (CCS) has been regarded as the most viable option for CO_2 emission reduction. Intergovernmental Panel for Climate Change (IPCC) estimates the investment in CCS technology to cost roughly $55 - $75 US per MWh of electricity generation from coal plants (Metz, Davidson, et. al, 2005). However, the US government is planning on creating a carbon trading market with prices starting at roughly $13 US per tonne, and going to $16 - $33 US per tonne of CO_2 by 2020 (Lomax, 2009). Therefore, the price of CO_2 was assumed at $25 US per tonne or Can$ 27.5 per tonne.

Air Pollution Reduction Costs

Air pollution is primarily caused by interaction of nitrous oxides, sulphur oxides, and particulate matter. A common issue for pricing the above contaminants individually is that these tend to interact together to cause both human health and environmental problems. Air pollution seriously damages human health and the environment: respiratory problems, premature deaths, eutrophication, and damage to ecosystems as a result of the deposition of nitrogen and acidic substances are some of the consequences of this problem which is both local and trans-frontier in nature. US Environmental Protection Agency obtained the Clean Air Interstate Rule (CAIR) in March 2005 to tackle acid rain and air-pollution related health-care issues in 28 states. The program is expected to save $85 - $100 billion US in healthcare benefits through 2015, and nearly $2 billion US in annual visibility benefits in Southeastern National Parks (EPA, 2005). European Union has enacted similar legislation in order to curb healthcare costs. While the costs are expected to be 7.1 billion Euros per year, the benefits from reduced healthcare costs alone amount to 42 billion Euros per year by 2020 (European Commission, 2005). Table 43 outlines the targets set by EU in order to achieve their goals.

Table 43: Air Pollution Reduction Targets Set by EU in Order to Meet Their Healthcare Goals

Pollutant	% Reduction from year 2000 levels by 2020
Sulphur oxides	82%
Nitrous oxides	60%
PM 2.5 and PM 10	59%
Volatile Organic Compounds (VOCs)	51%
Ammonia	27%

Table 44 outlines the pollutant levels in EU in the year 2000 obtained from European Environmental Agency (European Environment Agency, 2008), the absolute amount of pollution reduced for each pollutant, and, if the benefits are distributed evenly among the above five pollution reduction goals, the annual cost benefit for reducing a kilogram pollutant amount.

Table 44: Cost Benefit Analysis of Air Pollutant Reduction in European Union

Pollutant	Amount Produced in 2000 (kilotonnes)	Amount Produced in 2020 (kilotonnes)	Amount Reduction (kilotonnes)	Annual Cost Benefit due to Reduction (billion Euros)	Annual Benefit Price / kg Reduced (Euros)
Sulphur oxides	59679.50	10742.31	48937.19	6.98	0.1426
Nitrous oxides	64330.86	25732.23	38598.63	6.98	0.1808
PM 2.5 and PM 10	21596.00	8854.36	12741.64	6.98	0.5478
Volatile Organic Compounds (VOCs)	48170.14	23603.37	24566.77	6.98	0.2841
Ammonia	24098.14	17591.64	6506.5	6.98	1.0729

At an exchange rate of Can$ 1.54 per Euro, Table 45 outlines the approximate benefit value obtained for each pollutant reduction. It is important to note that unless carbon taxes or stricter environmental regulations are not enforced, the cost benefit from abating environmental pollution cannot be realized.

Table 45: Annual Cost Benefit of Air Pollutants per kg Averted

Pollutant	Annual Cost Benefit / kg (in Can $)
Sulphur oxides	0.2196
Nitrous oxides	0.2784
PM 2.5 and PM 10	0.8436
Volatile Organic Compounds (VOCs)	0.4735

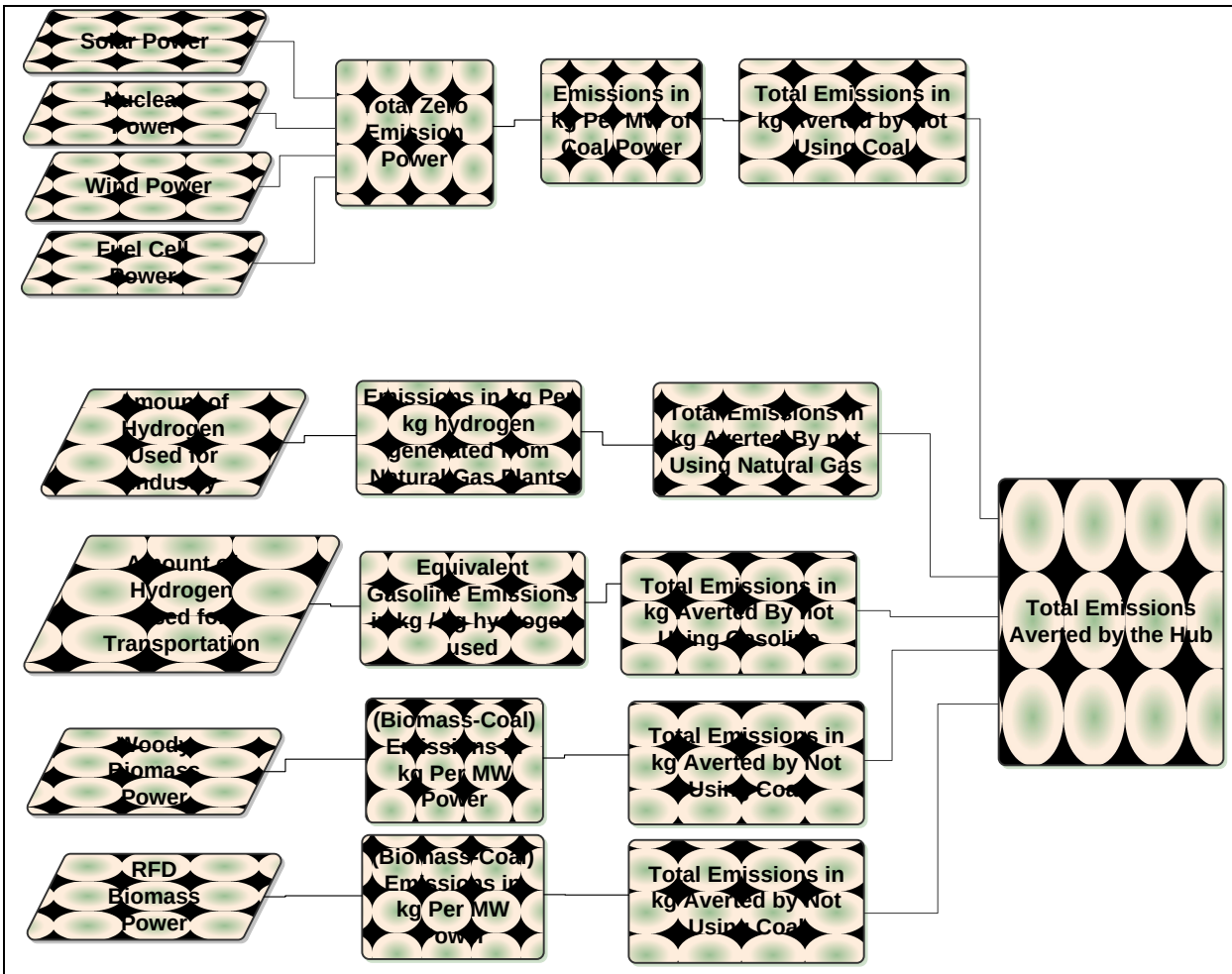

Figure 56: Process Flow Diagram for Calculating Total Emissions

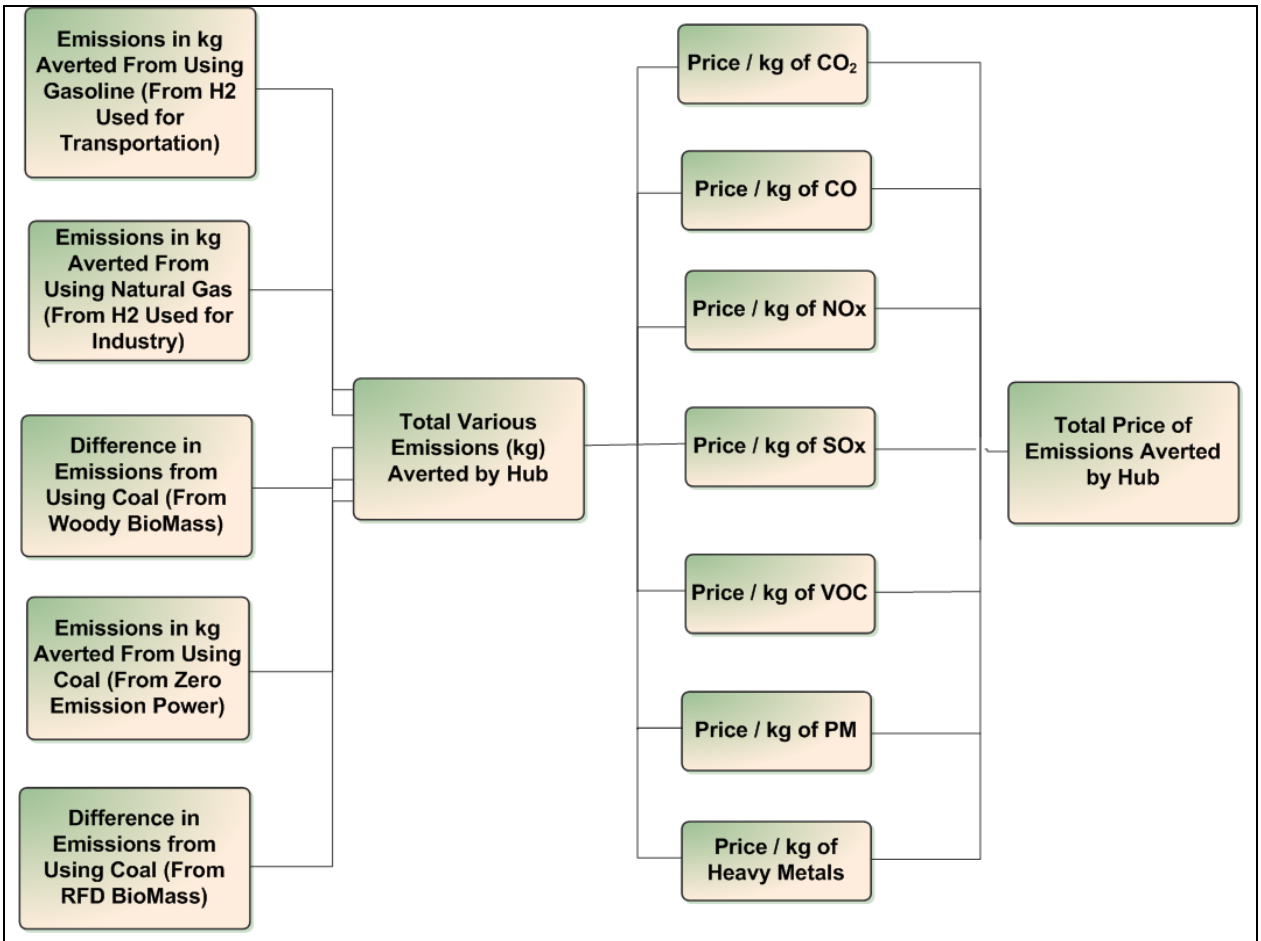

Figure 57: Process Flow Diagram for Obtaining Total Emissions Costs

Table 46 provides a comparison of emissions of coal plants with those of biomass reactors. Table 47 provides a summary of all the model design variables used for estimating air pollution emission amounts and costs.

Table 46: Emissions Comparison of Coal with Biomass Plants

Fuel Source	CO_2 (kg/MWh)	NOx (g/MWh)	SOx (g/MWh)	PM (g/MWh)	Hg (mg/MWh)
Lignite	1,100	3290	6000	41	42
RDF	1,100	680	322	1720	490
Woody Biomass	1130	330	22	89	4

Table 47: Summary of all Parameters for Environmental Costing and Emissions

Parameter	Amount	Source
CO_2 (with C in VOC and CO) for Vehicles	377 g / mile	(GREET, 2009)
CH_4 for vehicles	0.015 g / mile	(GREET, 2009)
N_2O for vehicles	0.012 g / mile	(GREET, 2009)
GHGs for vehicles	381 g / mile	(GREET, 2009)
VOC Total for vehicles	0.180 g / mile	(GREET, 2009)
CO Total for vehicles	3.745 g / mile	(GREET, 2009)
NOx Total for vehicles	0.141 g / mile	(GREET, 2009)
PM_{10} Total for vehicles	0.029 g / mile	(GREET, 2009)
$PM_{2.5}$ Total for vehicles	0.015 g / mile	(GREET, 2009)
SOx Total for vehicles	0.006 g / mile	(GREET, 2009)
CO_2 from Natural Gas Plants	117,000 lbs / billion BTU energy input	(Naturalgas.org, 2004)
CO from Natural Gas Plants	40 lbs / billion BTU energy input	
NOx from Natural Gas Plants	92 lbs / billion BTU energy input	(NaturalGas.org, 2004)
SOx from Natural Gas Plants	1 lbs / billion BTU energy input	(NaturalGas.org, 2004)
Total PM from Natural Gas Plants	7 lbs / billion BTU energy input	(NaturalGas.org, 2004)
Sulphur oxides cost	0.2196 ($ Can / kg)	(European Commission, 2005)
Nitrous oxides cost	0.2784 ($ Can / kg)	(European Commission, 2005)
PM 2.5 and PM 10 cost	0.8436 ($ Can / kg)	(European Commission, 2005)

Volatile Organic Compounds (VOCs) cost	0.4735 ($ Can / kg)	(European Commission, 2005)
CO_2 cost	US $ 16 – 33 / tonne	(Lomax, 2009)

3.3 List of Parameters:

Table 48 outlines the input parameters specified by the user at the start of the simulation. Table 49 outlines the hourly data previously entered for the model from Excel files. Table 52 and Table 53 specify all the model design variables considered in the model for obtaining the output data. Table 51 specifies the hourly output data sent to Excel files at the end of each simulation. Table 50 outlines the output parameters displayed at the end of each simulation.

Table 48: Parameters Entered by User at Start of Simulation

User Input Parameters	Units (if applicable)
Hydrogen Storage System	Either Underground Cavers or Above Ground Tanks
Peak Nuclear Power	(MW)
Peak Power from Wood Chips Reactors	(MW)
Peak Power from Refuse Derived Fuel Reactors	(MW)
Number of On-Shore Wind Turbines	
Number of Off-Shore Wind Turbines	
Coal Boiler Capacity	(MW)
Maximum Number of Electrolyzers Used	
Area Covered by Solar Panels	(m^2)

Table 49: Hourly Input Data Entered from Excel Files

Input Parameters from Excel Files		Source
Hourly Electricity Demand from Nanticoke	Data obtained for Nanticoke Generating Stations	(IESO, 2009)

Hourly Plug-In Hybrid Demand		Estimated (See section 3.2.9)
Hourly On-Shore Wind Power (MW / turbine)	Data Obtained for Port Burwell Wind Farm	(IESO, 2009)
Hourly Solar Power (MW / m^2)	Estimated from hourly Solar Insolation, and Hourly Temperature profile data	(Kusterer, 2009; National Research Council Canada, 2008)
Hourly Ontario Energy Price ($ / MWh)		(IESO, 2009)
Hourly Industrial Hydrogen Price ($ / kg)	Estimated from daily natural gas prices, and quote from Air Liquide	(EIA, 2009), Air Liquide Quote
Hourly Hydrogen Price for Transportation ($ / kg)	Calculated based on Daily Gasoline Price, and the equivalent useful energy available from hydrogen per kg if fuel cells are used	(EIA, 2009)

Table 50: Output Parameters Generated by the Model

Output Parameters	Units (if applicable)
Total Solar Power Cost	($ / year)
Total Wind Power Cost	($ / year)
Total Nuclear Power Cost	($ / year)
Total Biomass Power Cost (including coal)	($ / year)
Total Electrolyzer Cost	($ / year)
Total Fuel Cell Cost	($ / year)
Total Hydrogen Storage Cost	($ / year)
Total Oxygen Storage Cost	($ / year)
Total Hub Cost	($ / year)

Total Electricity Generation Revenue	($ / year)
Total Revenue from Hydrogen Sales	($ / year)
Total Revenue from Oxygen Sales	($ / year)
Total Emissions Revenue from Utilities	($ / year)
Total Emissions Revenue from Transportation and Industry	($ / year)
Total Hub Revenue	($ / year)
Profit / Loss	($ / year)
Amount of Excess Hydrogen Generated after meeting Electricity Demand	(kg / year)
Hub Cost	($ / MWh)
Total Energy Generated for Electricity Demand	(MWh / year)
Additional Hub Cost (if revenue from hydrogen and /or oxygen sales were negative)	(MWh / year)
Effective Hub Cost	($ / MWh)
Average Solar Power Revenue (Electricity Price when Solar Power is used)	($ / MWh)
Average Wind Power Revenue	($ / MWh)
Average Nuclear Power Revenue	($ / MWh)
Average Biomass Power Revenue	($ / MWh)
Average Fuel Cell Power Revenue	($ / MWh)
Maximum Number of Electrolyzer Units Used	Each unit generates 960 m^3 / h of H_2 at 1 MPa
Average Number of Electrolyzer Units Used	
Maximum Number of Fuel Cell Stacks Used	Each stack generates 16.5 kW of peak power

Average Number of Fuel Cell Stacks Used	
Average Solar Power Cost	($ / MWh)
Average Wind Power Cost	($ / MWh)
Average Nuclear Power Cost	($ / MWh)
Average Biomass Power Cost	($ / MWh)
Average Electrolyzer Cost	($ / MWh)
Average Fuel Cell Cost	($ / MWh)

Table 51: Hourly Output Data Generated by Model Transferred to Excel Files

Output Parameters to Excel Files	Units (if applicable)
Total Hourly Electricity Demand Data	MW / hour
Total Hourly Solar Power Data	MW / hour
Total Hourly On-Shore Wind Power Data	MW / hour
Total Hourly Off-Shore Wind Power Data	MW / hour
Total Hourly Biomass Power Data	MW / hour
Hourly Power Generated by Fuel Cells Data	MW / hour
Hourly Hydrogen Produced by Electrolyzers Data	Kg / hour
Hourly Oxygen Produced by Electrolyzers Data	Kg / hour
Amount of Hydrogen in Storage each Hour Data	Kg / hour
Hourly Power Lost to Atmosphere Data	MW / hour
Hourly Hydrogen Consumed by Fuel Cells Data	Kg / hour
Hourly Oxygen Consumed by Fuel Cells Data	Kg / hour
Hourly Heat Loss from Fuel Cells Data	MW / hour

Hourly Water Consumed by Electrolyzers Data	Kg / hour
Hourly Water Produced by Fuel Cells Data	Kg / hour

Table 52: Model Design Variables Used to Estimate Output Data

Design Variable	Value	Source
Transformer Efficiency	98%	(Commercial and Industrial Transformers Initiative, 2000)
Winter Onshore to Offshore Power factor	1.217	(Environment Canada, 2003)
Spring Onshore to Offshore Power factor	1.242	(Environment Canada, 2003)
Summer Onshore to Offshore Power factor	1.249	(Environment Canada, 2003)
Fall Onshore to Offshore Power factor	1.236	(Environment Canada, 2003)
Onshore Wind Turbine Installed Capital Cost	US$ 2,750,000 / MW	(Danish Wind Energy Association, 2003)
Offshore Wind Turbine Installed Capital Cost	17,460,000 DKK / 1.5 MW	(Danish Wind Energy Association, 2003)
Operating and Maintenance Cost for both Offshore and Onshore Wind Turbines	US$ 0.01 / kWh energy generated	(Danish Wind Energy Association, 2003)
Operating Life for Offshore and Onshore Wind Turbines	20 years	(Danish Wind Energy Association, 2003)
Onshore Wind Voltage	690 V	(GE- 1.5 MW Wind Turbines Technical Specifications, 2009)
Offshore Wind Voltage	690 V	(Vestas Wind Systems A/S, 2009)

Transformer Cost	Assumed negligible compared to turbine costs	
Photovoltaic Cell Nominal Operating Cell Temperature	45 C	(Suntech Power, 2009)
Photovoltaic (PV) Cell Temperature Operating Limits	-40 C to 85 C	(Suntech Power, 2009)
Temperature Efficiency Loss	0.48% / C away from NOCT	(Suntech Power, 2009)
PV System Power Efficiency	13.6%	(Archer & Barber, 2004)
PV Stack Maximum Voltage	1000 V	(Suntech Power, 2009)
Inverter Efficiency	95%	(Navigent Consulting, 2006)
Capital Cost of PV Stack	US$ 3.47 / W	(OY Not LLC, 2009)
PV Balance of Plant Cost	33% of PV Cost	(United Nations Environment Program, 2002)
Lifespan of PV Stack	25 years	(Suntech Power, 2009)
Operating and Maintenance Cost of PV Stack	15300 Euro per year / 935 kW capacity	(Natural Resources Canada, 2009)
Inverter Cost	Can $ 0.70 / W capacity	(Navigent Consulting, 2006)
Inverter Operating Lifespan	5 years	(Navigent Consulting, 2006)
Nuclear Reactor Operating Range	60% to 100% of full capacity	(Jizhou et al., 2005)
Nuclear Reactor (NR) Capital Cost	$ 4594 / kW	(Parsons & Yangbo, 2009; World Nuclear Association, 2008)
NR Operating life	60 years	(Bruce Power, 2008)
Real Interest Rate	5%	Assumed
NR Fixed Operating Cost	$ 56 US / kW	(Parsons & Yangbo, 2009)
NR Variable Operating Cost	$ 0.00042 US / kWh	(Parsons & Yangbo, 2009)
Uranium Oxide Cost	$ 55 US / lb	(WISE Uranium Project, 2009)

Uranium Conversion Cost	$ 12 US / kg U	(WISE Uranium Project, 2009)
Uranium Enrichment Cost	$ 163 US / kg U	(WISE Uranium Project, 2009)
Uranium Fabrication Cost	$ 275 US / kg U	(WISE Uranium Project, 2009)
Uranium Conversion Efficiency	97%	(WISE Uranium Project, 2009)
Uranium Enrichment Efficiency	13.7%	(Uranium Fuel Cost Calculator, 2009)
Tail Fuel Disposal Cost	$ 110 / kg U	(WISE Uranium Project, 2009)
Spent Fuel Disposal Cost	$ 840 / kg U	(WISE Uranium Project, 2009)
Energy Content of Enriched Uranium	42 GWd / tonne	(Uranium Fuel Cost Calculator, 2009)
Nuclear Power Plant Efficiency	34.2%	(WISE Uranium Project, 2009)
Project Capital Cost with Emission Control, Woody Biomass	$ 306,000,000	(Ontario Ministry of Energy, 2006)
Woody Biomass Plant Economic Life Woody Biomass	20	(Ontario Ministry of Energy, 2006)
Feed Stock Cost ($/BDT) Woody Biomass	180	(Ontario Ministry of Energy, 2006)
Project Capital ($/MWh) Woody Biomass	23	(Ontario Ministry of Energy, 2006)
Operation and Maintenance Cost ($/MWh) Woody	26	(Ontario Ministry of Energy, 2006)

Biomass		
Levelized Unit Energy Cost ($/MWh) Woody Biomass	115	(Ontario Ministry of Energy, 2006)
Project Capital Cost with Emission Control RDF Boiler	$ 406,000,000	(Ontario Ministry of Energy, 2006)
Plant Economic Life (years) RDF Boiler	20	(Ontario Ministry of Energy, 2006)
Feed Stock Cost ($/BDT) RDF Boiler	87	(Ontario Ministry of Energy, 2006)
Project Capital ($/MWh) RDF Boiler	45	(Ontario Ministry of Energy, 2006)
Operation and Maintenance Cost ($/MWh) RDF Boiler	36	(Ontario Ministry of Energy, 2006)
Levelized Unit Energy Cost ($/MWh) RDF Boiler	140	(Ontario Ministry of Energy, 2006)
Capital Expenditures ($/MWh) Coal Boiler	20.38	(Ayres, MacRae, & Stogran, 2004)
Total Operating and Maintenance Cost ($/MWh) Coal Boiler	9.3	(Ayres et al., 2004)
Fuel ($/MWh) Coal Boiler	18.04	(Ayres et al., 2004)
Operating Life (yr) Coal Boiler	30	(Ayres et al., 2004)
Levelized Unit Energy Cost ($/MWh) Coal Boiler	47.72	(Ayres et al., 2004)
Electrolyzer Running Capacity Range	40% - 100%	(Hydrogenics Corp, 2009)
Standby Possible (0.% Power)	Yes	(Hydrogenics Corp, 2009)
Power Consumed	5.2 kWh / Nm^3 H_2 produced	(Hydrogenics Corp, 2009)

Max Hydrogen Generated	960 Nm^3 / h	(Hydrogenics Corp, 2009)
Hydrogen Output Pressure	1 MPa	(Hydrogenics Corp, 2009)
1 MPa to 25 MPa Compressor Efficiency Factor for Tank Storage	0.80	(Peters et. al., 2004)
1 MPa to 7 MPa Compressor Efficiency for Underground Storage	0.85	(Peters et. al., 2004)
Electrolyzer Life Span	20 years	(Ramsden, 2008)
Electrolyzer Refurbishment Cost	30% of Capital Cost / every 10 years	(Ramsden, 2008)
Electrolyzer Operating and Maintenance Cost	7% of Capital Cost	(Ramsden, 2008)
Electrolyzer Total Installed Capital Cost	2005 US $ 2,479,950 / max 485 Nm^3 H_2 Generation System	(Ramsden, 2008)
Fuel Cell Voltage Range	40 – 80 V	(Hydrogenics Corp, 2009)
Fuel Cell Maximum Current	350 A	(Hydrogenics Corp, 2009)
Fuel Cell Efficiency Factor	0.53	(Hydrogenics Corp, 2009)
Fuel Cell Maximum Power per Stack	16.5 kW	(Hydrogenics Corp, 2009)
Fuel Cell Capital Cost	US $ 1500 / kW capacity	(US DOE, 2007)
Fuel Cell Life Span	5 years	Assumed based on 20000 hour life capacity
Fuel Cell Total Operating Hours	20,000 hours	(US DOE, 2007)
Fuel Cell Fixed Operating Cost	US $ 5.65 / kW capacity	(Energy Information Administration, 2009)
Fuel Cell Variable Operating Cost	US $ 0.04792 / kWh generated	(Energy Information Administration, 2009)

Hydrogen Storage Tank Life	10 yrs	Quote from CP Industries
Hydrogen Storage Tank Pressure	3600 psi	Quote from CP Industries
Compressor Life	22 yr	(Amos, 1998)
Compressor Cost	$ 702 / kW	(TransCanada Pipelines, 1996)
Hydrogen Storage Tank Price	$ 20,000	Quote from CP Industries
Hydrogen Underground Storage Lifespan	27 years	(Foh et al., 1971)
Underground Hydrogen Storage Capacity for Nanticoke Area	25 Million Tonnes	(Shafeen et al., 2004)
Oil Energy Content (LHV)	32 MJ / litre	(US DOE, 2009)
Hydrogen Energy Content (HHV)	141 MJ / kg	(US DOE, 2009)
Internal Combustion Engine Efficiency	23%	(US DOE, 2009)
Fuel Cell Efficiency	40%	Assumed
Natural Gas Price to Industrial Hydrogen Price Factor	(2.02/7) $ / kg H_2	Air Liquide Quote

Gasoline Price to Transportation Hydrogen Price Factor	7.66	Calculated based on energy densities, and propulsion system energy efficiencies
% Tax on Gasoline	30%	(GasBuddy Inc, 2009)
Oxygen Price	$0.1123 / kg	Air Liquide Quote
Number of Light Vehicles in Canada	19000000	(Transportation in Canada, 2008)
Estimated Population of Canada	32626363	(Statistics Canada, 2008)
Population of GTA	5390412	(Statistics Canada, 2008)
Fraction of Plug-In Hybrids in Ontario by 2020	0.05	(Nichols, 2009)
Typical Car Gasoline Consumption	10.5 litres / 100 km	(Natural Resources Canada, 2009)
# of Kilometres Driven by Average Car in GTA	20000 kilometres / yr	Assumed
Efficiency of Plug In Batteries	80% (Assumed year-round average)	(Kim e. al., 2008)
Fraction of Electricity Supplied to GTA by Nanticoke GS	0.133	(IESO, 2009)
CO_2 (with C in VOC and CO) for Vehicles	377 g / mile	(GREET, 2009)
CH_4 for vehicles	0.015 g / mile	(GREET, 2009)
N_2O for vehicles	0.012 g / mile	(GREET, 2009)
GHGs for vehicles	381 g / mile	(GREET, 2009)
VOC Total for vehicles	0.180 g / mile	(GREET, 2009)
CO Total for vehicles	3.745 g / mile	(GREET, 2009)
NOx Total for vehicles	0.141 g / mile	(GREET, 2009)
PM_{10} Total for vehicles	0.029 g / mile	(GREET, 2009)

$PM_{2.5}$ Total for vehicles	0.015 g / mile	(GREET, 2009)
SOx Total for vehicles	0.006 g / mile	(GREET, 2009)
CO_2 from Natural Gas Plants	117,000 lbs / billion BTU energy input	(NaturalGas.org, 2004)
CO from Natural Gas Plants	40 lbs / billion BTU energy input	(NaturalGas.org, 2004)
NOx from Natural Gas Plants	92 lbs / billion BTU energy input	(NaturalGas.org, 2004)
SOx from Natural Gas Plants	1 lbs / billion BTU energy input	(NaturalGas.org, 2004)
Total PM from Natural Gas Plants	7 lbs / billion BTU energy input	(NaturalGas.org, 2004)
Sulphur oxides cost	0.2196 ($ Can / kg)	(European Commission, 2005)
Nitrous oxides cost	0.2784 ($ Can / kg)	(European Commission, 2005)
PM 2.5 and PM 10 cost	0.8436 ($ Can / kg)	(European Commission, 2005)
Volatile Organic Compounds (VOCs) cost	0.4735 ($ Can / kg)	(European Commission, 2005)
CO_2 cost	US $ 16 – 33 / tonne	(Lomax, 2009)

3.4 Logic for Meeting Power Demand:

3.4.1 Hydrogen Balance for Electricity

In order to meet the grid electricity demand, the model ensures that there is always enough hydrogen needed by fuel cells to meet power demand when power supply is less than power demand. If hydrogen in storage is depleted to less than the reserve capacity of 200,000 kg, hydrogen is purchased from industry at prices that hydrogen would have been sold by the hub at the time of the year. At the end of the year 50% of the excess hydrogen generated is sold to

industry while the rest is sold to the transportation sector. Clearly in the actual hub operation a more uniform hydrogen marketing strategy would be developed.

3.4.2 Hydrogen in Storage Tanks

Hydrogen storage in 20-40 kg tanks (a size that is commercially available at this time) on ground is expensive (approximately five times more expensive than underground hydrogen storage). Therefore, it is important to minimize generation of excess hydrogen in order to keep storage costs low. This is done by reducing the amount of power generated by nuclear and biomass reactors during periods of low electricity demand and/or high amount of hydrogen in storage tanks. If the storage tanks have a total of more than reserve + 800,000 kg of hydrogen, the biomass reactors are turned off, and the nuclear reactors are run at 60% capacity irrespective of the grid electricity demand. This in turn, forces fuel cells to consume some of the hydrogen stored to meet additional power demand. Likewise, when hydrogen in storage tanks drops to reserve + 175,000 kg, the nuclear and biomass reactors are ramped up to full capacity to meet electricity demand and to maximize the production. Detailed logic flow diagrams for the nuclear and biomass reactors can be obtained from Figures 34 to 36, and Figures 41 – 44 respectively. A further constraint is the maximum number of electrolyzers used in the hub. This also constrains the maximum amount of excess power that can be converted to hydrogen.

3.4.3 Hydrogen Stored Underground

Since underground hydrogen storage is significantly cheaper than storage tanks, the model assumes that there is no limit on the maximum amount of hydrogen that can be stored underground. In this scenario of operation nuclear reactors are used at peak capacity throughout the year, while biomass reactors are regulated in the same manner as in section 3.4.2. Biomass reactors are the one of the least environmentally friendly technologies considered in this work (i.e. they generate air pollution), and there is likely to be fuel shortages, so thus its use is minimized. 50% of the excess hydrogen generated by the end of the year is sold to industry, and the rest is sold to the transportation sector. The only constraint is the maximum number of electrolyzers used in the hub (to reduce capital cost), thereby limiting the maximum amount of excess power that can be converted to hydrogen. This results in some power wastage.

3.5 Experimental Design Strategy:

While solar photovoltaic cells, wind turbines, and biomass boilers can play a significant role in reducing air pollution, and local carbon footprint, they are also more expensive per MWh of electricity generated compared to cheaper and environmentally polluting technologies like coal plants. Nuclear plants are emission free and lower cost than the renewable forms of energy, but are capital intensive, have limited operational flexibility and require a long term planning commitment. With increasing healthcare costs attributed to air pollution, and introduction of carbon taxes to minimize the effects of global warming, there is a requirement for more of these environmentally friendly technologies to be implemented, and justified economically. The model created is used to analyze the technologies considered for electricity and hydrogen generation, and to understand the economic impact caused by implementing these technologies after considering their environmental benefits.

Factorial designs are used for analysis because of the ability to determine the effect of each technology, and to analyze the effects of interaction between technologies. In this work a two-level factorial experimental design is implemented to analyze the technologies being considered. Table 53 outlines the technologies being considered, and the minimum and maximum values considered for each of these technologies. The label for each technology is outlined in brackets in the first column. Hence, a total of seven factors are involved. However, since, it is uncommon to obtain five-factor interactions, a resolution V design generator is adopted where the condition for solar panel area (G) is confounded with the six-factor interaction (ABCDEF). The conditions for each run are outlined in Appendix F. Since only one nuclear reactor size technology will be considered at a time, the experiment is blocked into three sets of 64 runs for a total of 192 runs. Table 54 outlines the nuclear reactor sizes being considered, and the subsequent run numbers associated with them. These reactor sizes are being considered simply so that a decision can be made between one EPR (1600 MW) reactor, two EPR (1600 MW) reactors, two AECL (1085 MW) reactors, or three AECL (1085 MW) reactors.

Table 53: Energy Generation Technologies Considered

Technology Considered	Condition 1	Condition 0	Rationale
Nuclear Reactor Condition (A)	Maximum Output	Optimized	Optimized to prevent excessive H_2 generation due to high on-ground hydrogen storage tank cost
Biomass Reactors Capacity (B)	455 MW	0 MW	Constrained by maximum economically available resource per year in Southern Ontario for Wood Chips, and Refuse Derived Fuel
Coal Boilers Capacity (C)	300 MW	0 MW	Maximum reserve power to be used if needed only during peak electricity demand
# of Electrolyzers (D)	500	100	Range of number of electrolyzers used during trial runs of the model
# of On-Shore Wind Turbines (E)	150	0	Planned wind farm in Lake Erie (close proximity to Nanticoke)
# of Off-Shore Wind Turbines (F)	66	0	Existing wind farm in Port Burwell (close proximity to Nanticoke)
Area of Rooftop Solar Panels (G)	50500 m^2	0 m^2	Estimated total Area of Nuclear Reactor's Power Plant Roof

Table 54: Nuclear Reactor Sizes Considered

Nuclear Reactor Size	Reactor Choices	Runs Associated
1600 MW	1 EPR Reactor Only	1 through 64
2170 MW	2 AECL Reactors or 2 Westinghouse Reactors	65 through 128
3200 MW	2 EPR Reactors or 3 AECL Reactors or 3 Westinghouse Reactors	129 through 192

3.5.1 Operation Scenarios Considered:

The results obtained from the runs are then analyzed for three scenarios in order to determine the most probable technology mix for each scenario. The scenarios are as follows:

1) Meeting Electricity Demand Only – 'Cost Effective'

In this scenario, the purpose of the hub is to only meet the electricity demand for the hub (according to historic IESO data), while attempting to reduce power wastage by converting electricity into hydrogen, and then converting it back to electricity during peak demand hours. Any excess hydrogen that is produced at the end of the year is assumed to have no value due to lack of a hydrogen economy. Therefore, the objective function is to minimize plant costs while meeting the grid electricity demand.

2) Meeting Electricity Demand and Hydrogen Demand – 'Hydrogen Economy'

In this scenario, the purpose of the hub is to meet both the electricity demand for the hub, and to meet as much of the hydrogen demand for the transportation and industrial sector (i.e. the hydrogen economy) as possible in an economic manner. 50% of the excess hydrogen produced at the end of the year is sold to industry, and the rest is sold to the transportation sector. Hence, the objective function here is to maximize profits while meeting grid electricity demand, and supplying hydrogen to the transportation and industrial sector.

3) Meeting Electricity Demand and Maximizing Emissions Reduction Benefit – 'Environmental Benefit'

In this scenario, the purpose of the hub is to primarily meet the electricity demand for the hub, and then meet as much of the hydrogen demand for the transportation and industrial sector in order to maximize revenue from emission reduction (i.e. carbon trading). It is assumed that with a reduction in carbon emissions there will also be an associated reduction in other air emissions (e.g. smog generating emissions) which are more difficult to quantify (Hansen, et al., 2005). This scenario will result in selection of the most environmentally friendly technologies for electricity and hydrogen generation. While the objective function here is to maximize emissions revenue, the results will be compared with the above two scenarios for profitability, and the incremental costs of adding more environmentally friendly technologies to capitalize on additional environmental benefit.

Chapter 4 Results and Discussion

4.1 Graphs of all Results Obtained for a Sample Run

The technology options chosen for a sample run are displayed in Table 55. These also represent the input variables entered into the model at the start of the simulation.

Table 55: Technology Options Chosen for Sample Run

Technology Chosen	Capacity
Nuclear Capacity	2170 MW full blown
Electrolyzer Capacity	500 (40000 kg H_2 / hour)
Fuel Cell Capacity	Unbounded
Off-Shore Wind Turbine Capacity	300 MW
On-Shore Wind Turbine Capacity	100 MW
Solar PV Cells Capacity (rooftop)	5 MW
Biomass Capacity	455 MW
Coal Capacity	0 MW
Reserve Hydrogen	200,000 kg
Hydrogen and Oxygen Storage Mode	Underground

For this run Figure 58 displays the total electricity demand to be met by the hub while considering the 'cost effective' operational scenario. While the average electricity demand throughout the year is 1957 MW, the range varies considerably from 200 MW to 3601 MW. Figure 59 outlines the expected daily profile of electricity demand by season. As observed, summer and fall are the busiest seasons for the electricity grid being considered with peak demand being between 8 am and 8 pm. Figures 60 through 63 highlight the power available from off-shore an on-shore wind turbines. As observed, both off-shore and on-shore wind turbines generate the most electricity during winter and spring season, and the least electricity during summer. It is also observed from the daily plots (Figures 61 and 63) that wind electricity peaks at around 4 am, decreases, and then picks up around 4 pm. Since, wind electricity is available during times of lesser electricity demand both daily, and seasonally, there is a lot of wind power wasted or converted into hydrogen using electrolyzers, and thereby making them unsuited for meeting peak electricity demand. Figures 64 and 65 outline the

yearly and daily amount of solar energy available per hour. As observed, solar energy is abundantly available during summer, but not during winter. This is due to lesser sunlight hours and colder temperatures in winter. Figures 66 and 67 outline the nuclear and biomass reactor power supply profiles when nuclear reactors are running at peak capacity throughout the year. As observed, the biomass reactors only turn on during late January and August when electricity demand is high, and are off for the rest of the year. This is to take advantage of cleaner technologies first such as nuclear, and fuel cells. However, Figures 68 through 71 outline the nuclear and biomass reactor power supply profiles if the reactors were ramped up and down based on electricity demand, and the amount of hydrogen in storage. As observed from Figures 69 and 71, both biomass boilers and nuclear reactors result in being ramped down from 8 am to around 2 pm to ensure the hydrogen in storage tanks is consumed by fuel cells first to generate electricity during peak demand. Once the amount of hydrogen in storage tanks decreases to 800,000 kg or lower, both nuclear and biomass reactors ramp up to meet a higher portion of the electricity demand.

Figures 72 and 73 outline the hourly amount of hydrogen consumed by fuel cells to generate electricity. As observed through Figure 73, hydrogen demand is the highest during peak demand hours for all four seasons. However, increasing nuclear reactor size will result in reducing the magnitude of dependency on fuel cells to meet peak electricity demand. Since one mole (2 g) of H_2 is consumed along with half a mole (16 g) of O_2 to produce 1 mole (18 g) of H_2O, water production outlined is exactly the same as that of hydrogen consumption. The only difference is the mass per hour moved to account for the mass difference per mole of hydrogen, oxygen, and water. Likewise, Figures 74 and 75 outline the hourly amount of hydrogen produced by electrolyzers. As expected, hydrogen generation is least during peak electricity demand hours, and highest during least electricity demand hours. Profiles observed for oxygen generated, and water consumed are exactly the same as Figure 74 except for the change in the mass flowing each hour to account for mole balances. It should be noted that if water, and oxygen are sold (note that the water will be purified through the process), or are used to meet other demands, the model has the capability to account for the change in material consumption and production profile, and, as a result purchase more water from industry to meet electrolyzer demand if necessary. Although not considered in this work, the availability of pure oxygen

could integrate well will an oxy-combustion process for a natural gas turbine or even a coal gasification generation station.

Figures 76 and 77 outline the profiles for net hydrogen available in storage tanks. As observed, lack of electricity demand in spring and parts of winter results in excess hydrogen production using electrolyzers. However, high electricity demand during summer increases the demand for hydrogen from fuel cells. Since the net daily balance for hydrogen is negative during summer, as observed in Figure 77, most of the hydrogen stored is used before the end of summer, and additional hydrogen is purchased from industry if needed to ensure hydrogen in tanks do not drop below reserve levels. Since, hydrogen is stored underground, the maximum amount of hydrogen storage is not capped (it is assumed that the storage vessel will be constructed of sufficient size), and as a result produces roughly 25 million kg of excess hydrogen by the end of the year. Since data for actual hydrogen demand for transportation and industry are not available, it is assumed that half of the hydrogen is sold to the transportation sector at estimated hydrogen prices for transportation, and the other half is sold to the industrial sector at estimated hydrogen prices of industry. If no hydrogen was purchased throughout the year, the maximum levelized price per kg of hydrogen attainable is $ 4.85 per kg. However, previous purchases of hydrogen during the year for meeting electricity demand lowers the levelized price per kg of hydrogen due to lower net hydrogen revenues.

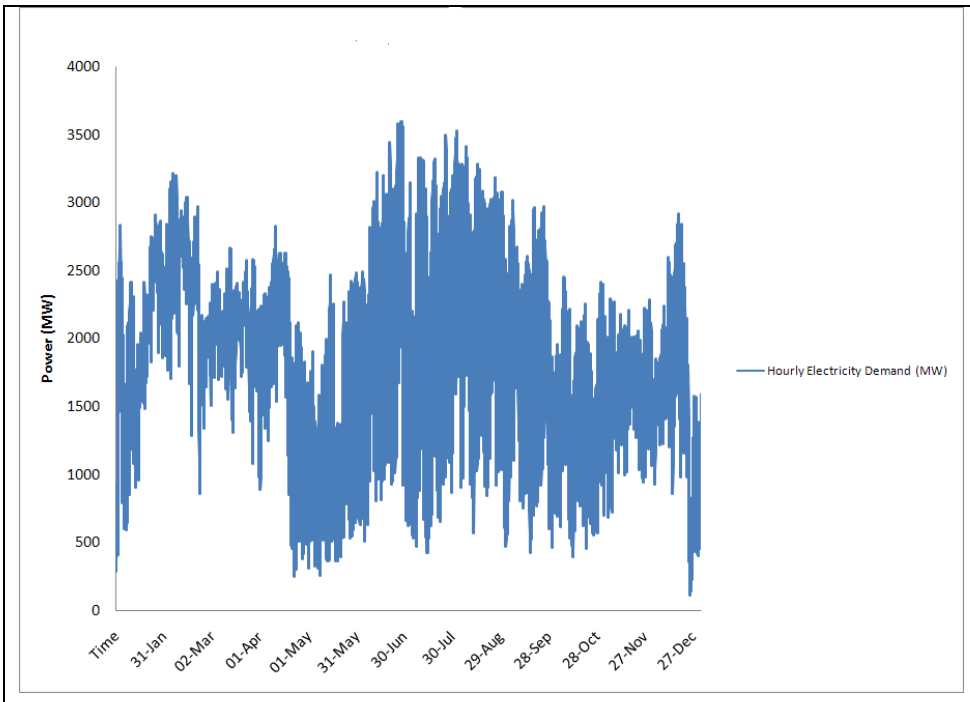

Figure 58: Hourly Grid Electricity Demand

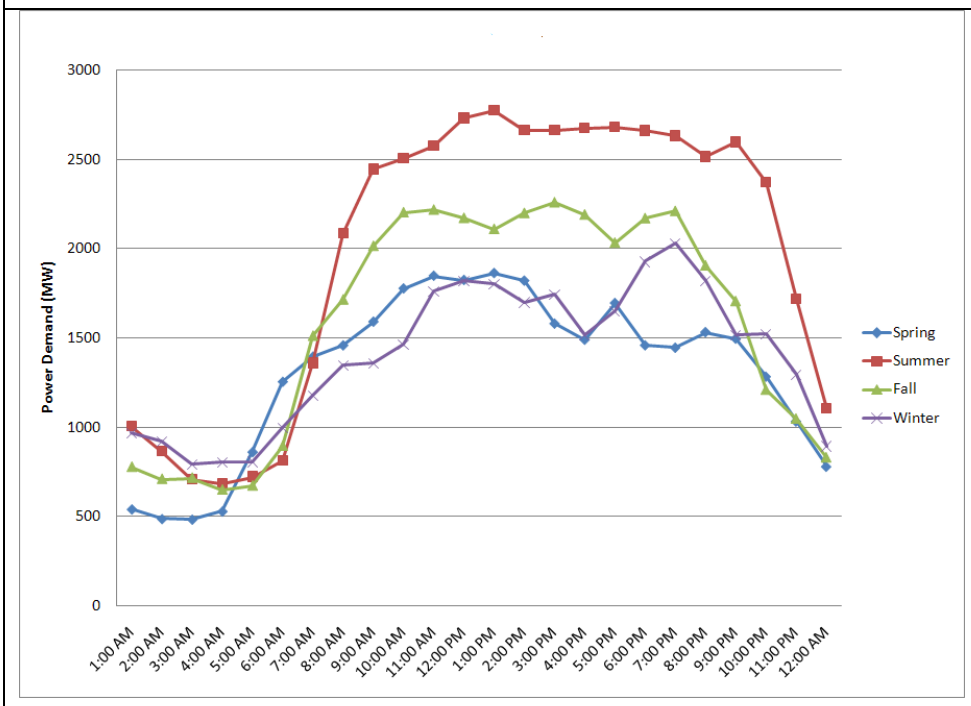

Figure 59: Hourly Grid Electricity Demand by Season

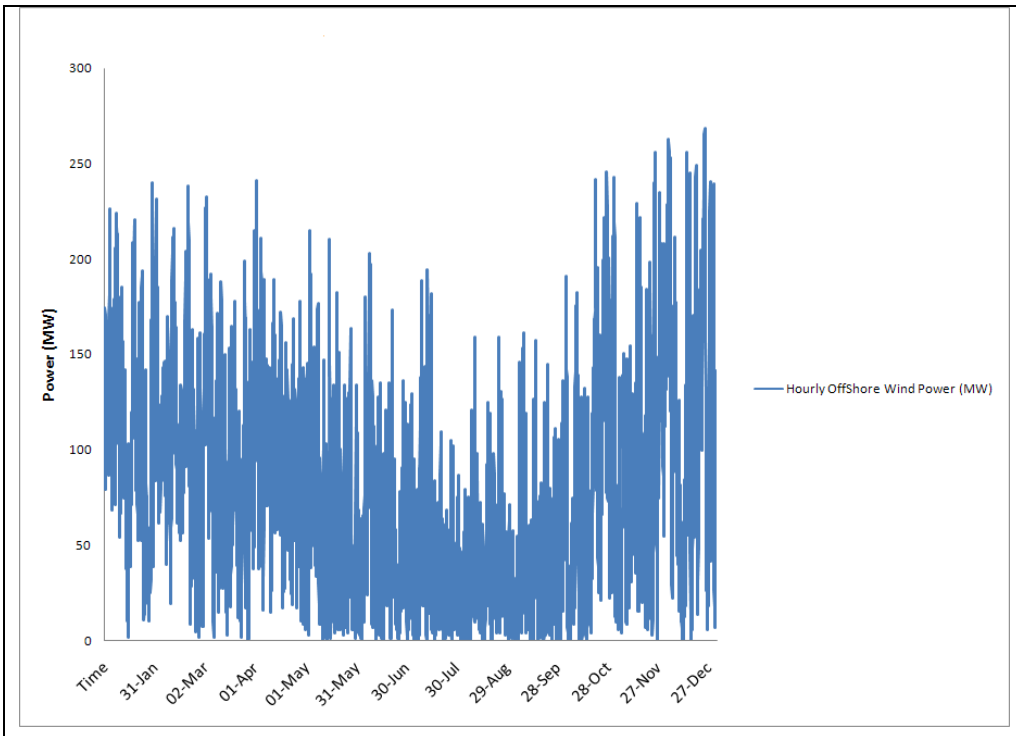

Figure 60: Hourly Off-Shore Wind Power Supply from 150 2MW Turbines

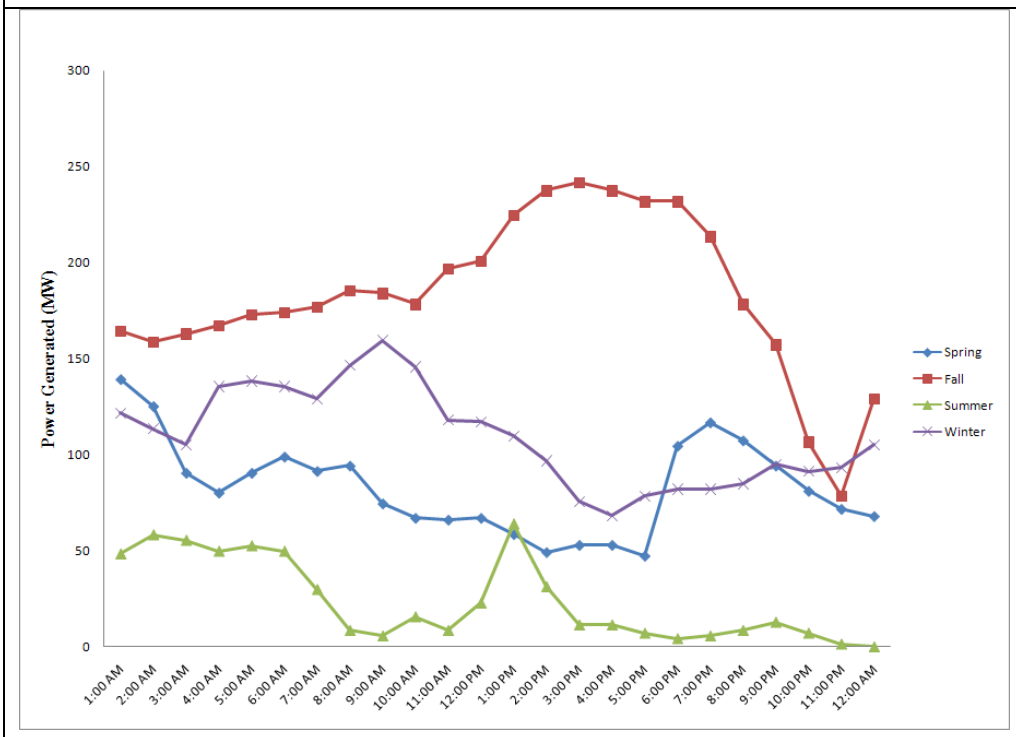

Figure 61: Hourly Off-Shore Wind Power Supply by Season

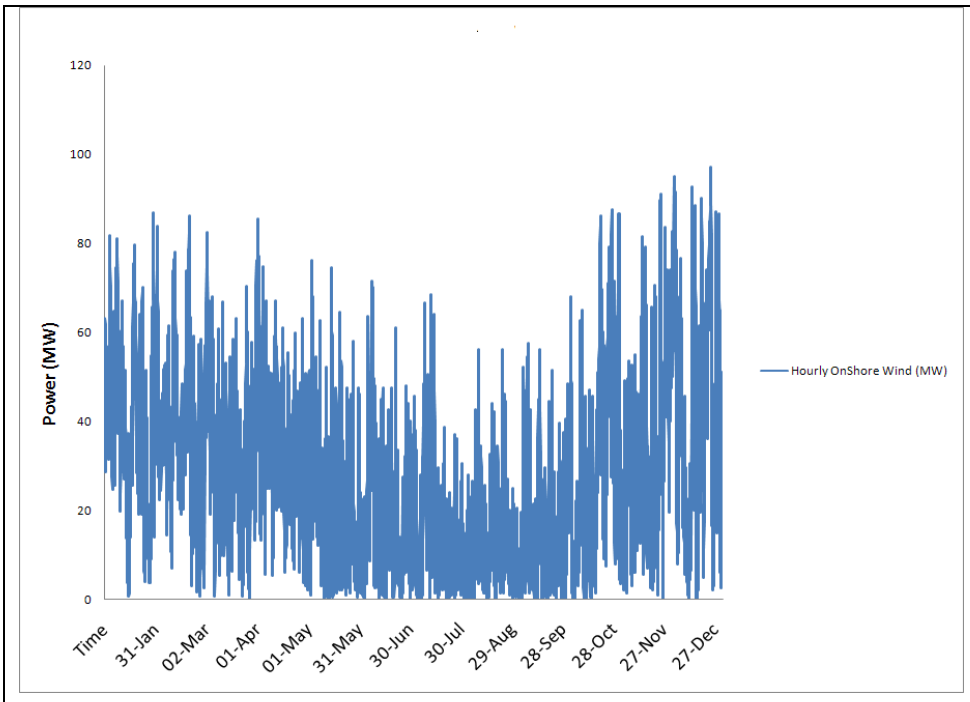

Figure 62: Hourly On-Shore Wind Power Supply from 66 1.5MW Turbines

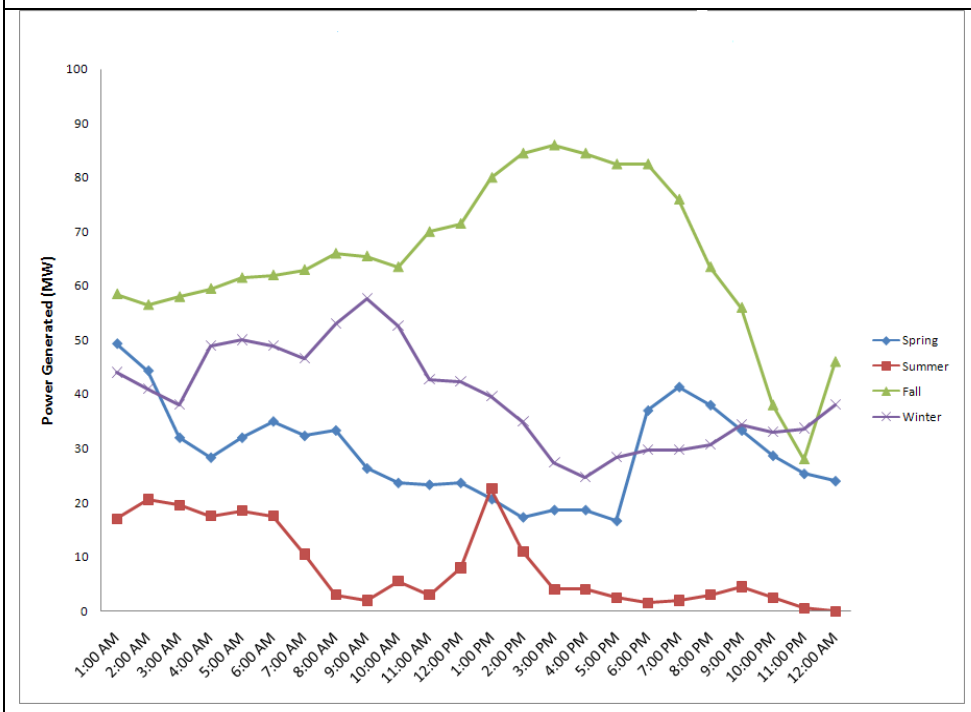

Figure 63: Hourly On-Shore Wind Power Supply by Season

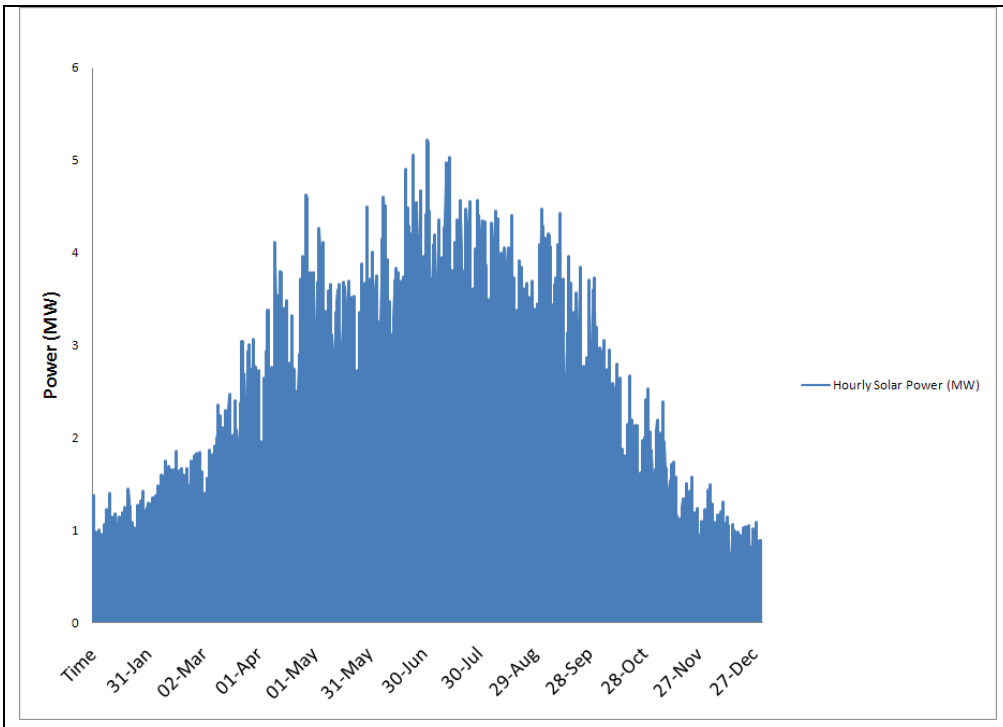

Figure 64: Hourly Solar Power Supply from Roof-Top Solar Panels (50500 sq. m)

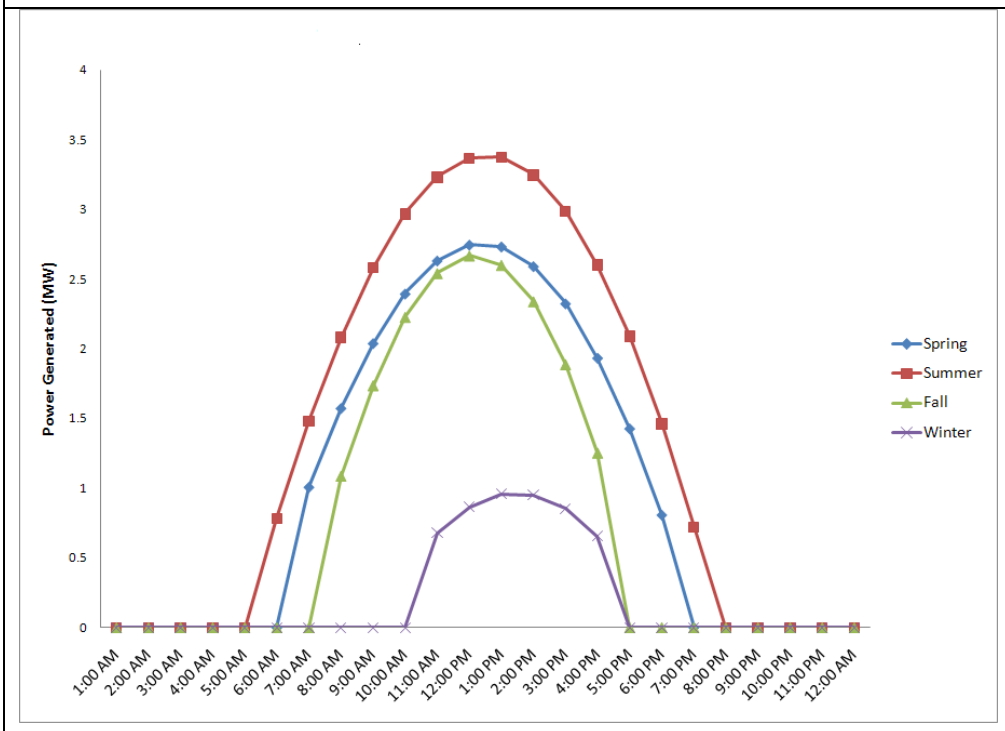

Figure 65: Hourly Solar Power Generated by Season

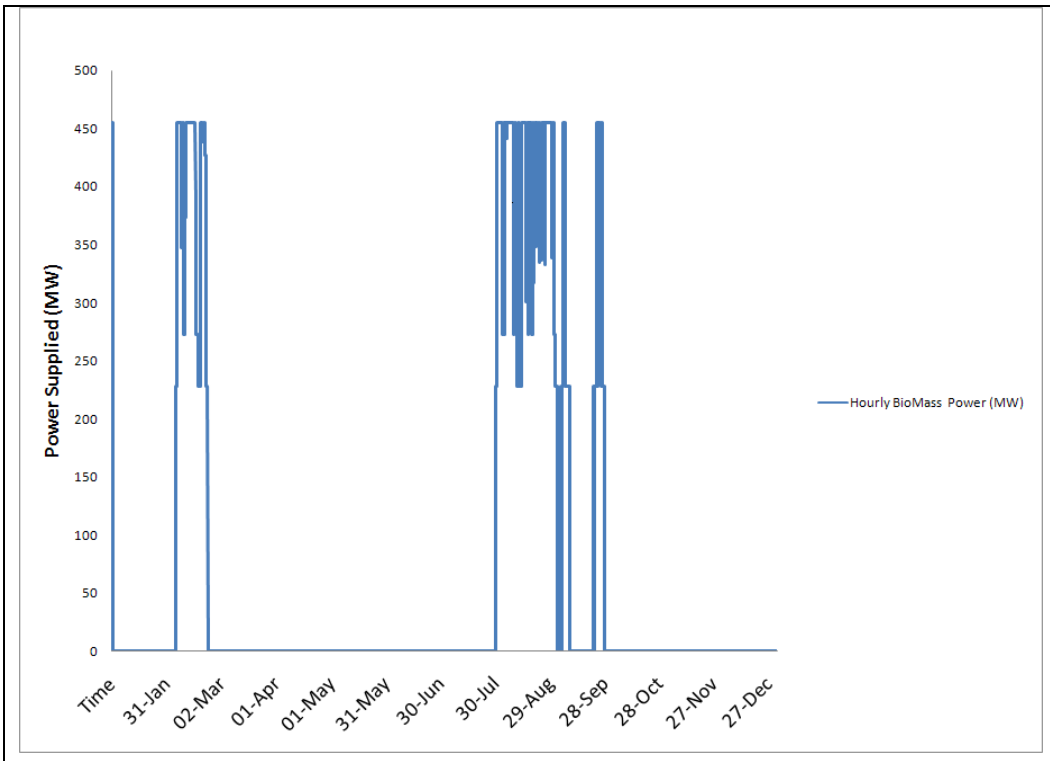

Figure 66: Hourly Biomass Power Supply When Nuclear Reactors Run at Full Capacity

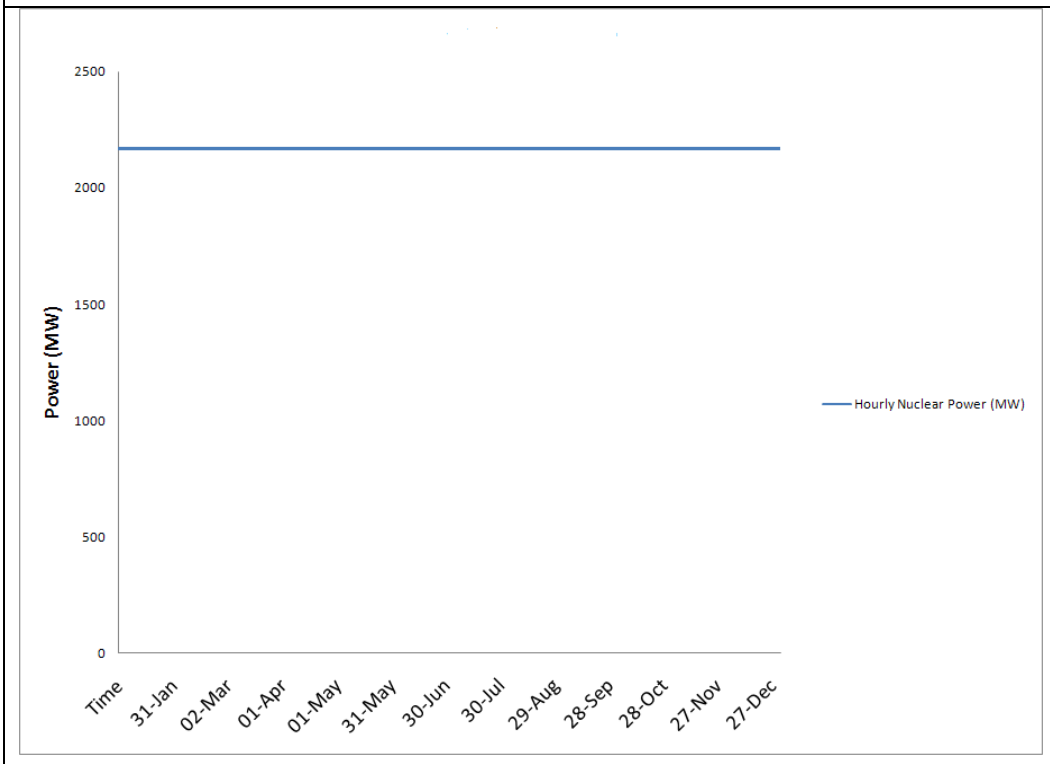

Figure 67: Hourly Nuclear Power Supply When Nuclear Reactors Run at Full Capacity

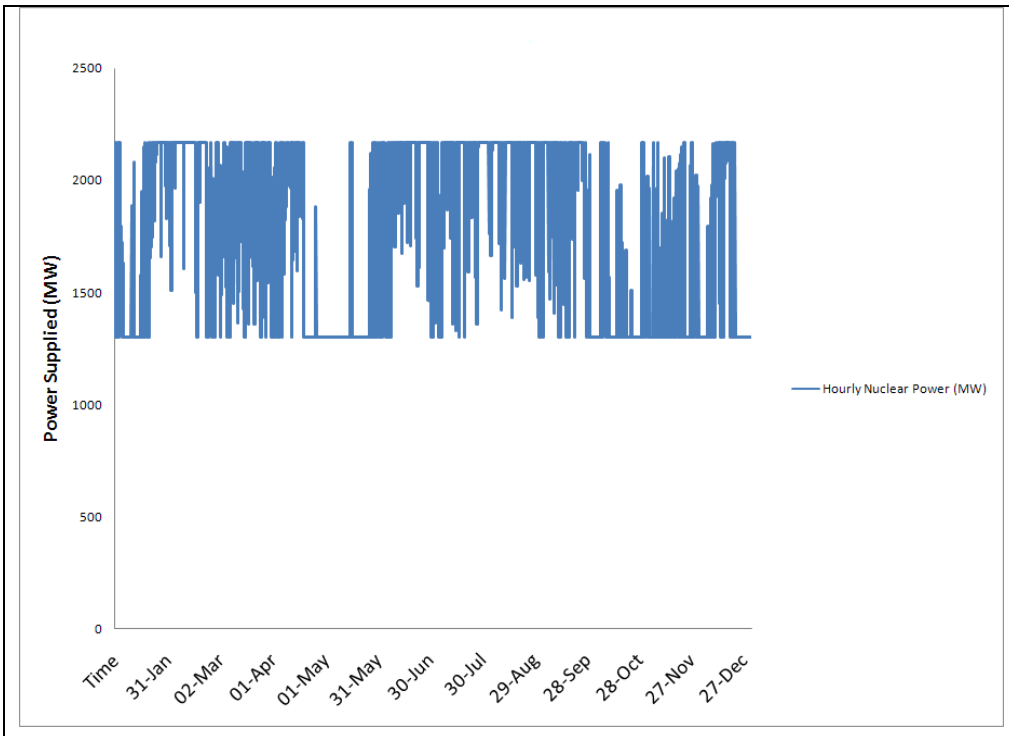

Figure 68: Hourly Nuclear Power Supply When Nuclear Reactors when Power Output follows Electricity Demand

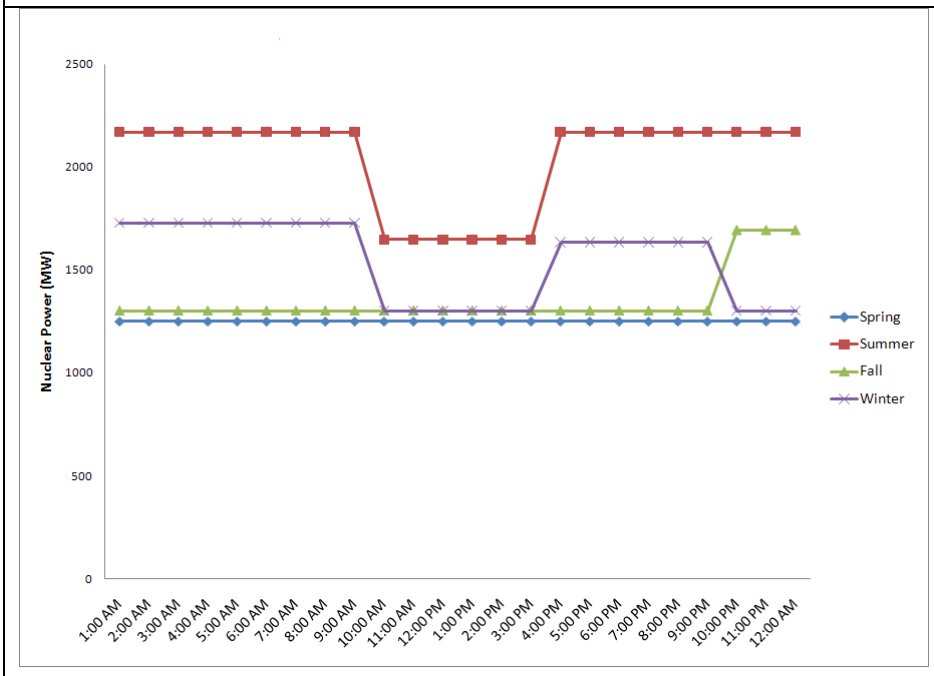

Figure 69: Hourly Nuclear Power by Season When Nuclear Reactors when Power Output follows Electricity Demand

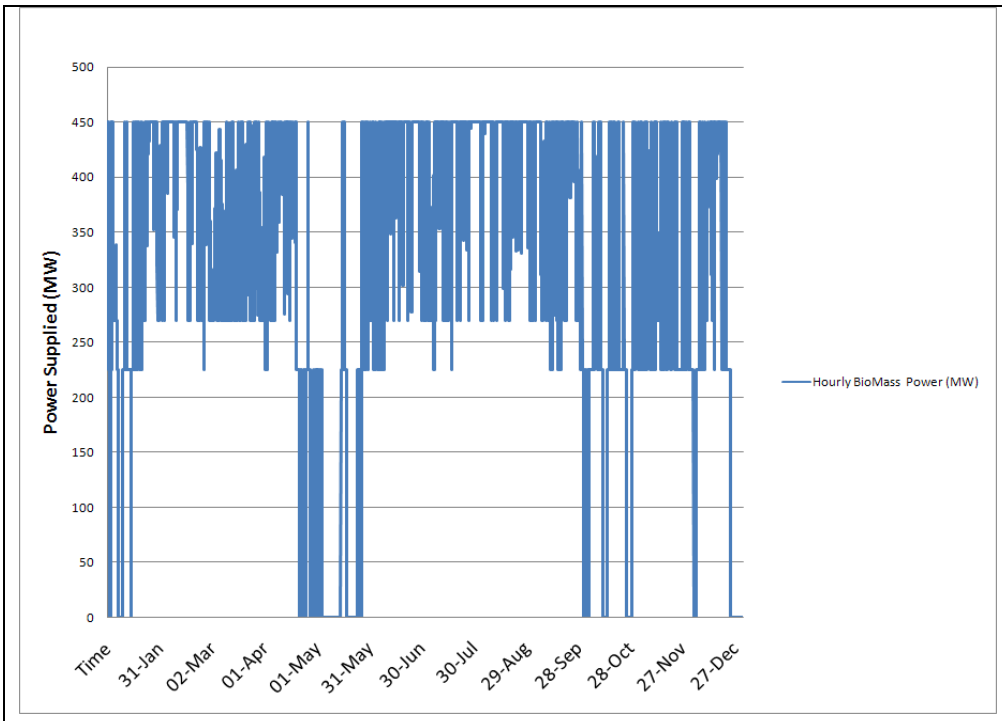

Figure 70: Hourly Biomass Power Supply When Power Output follows Electricity Demand

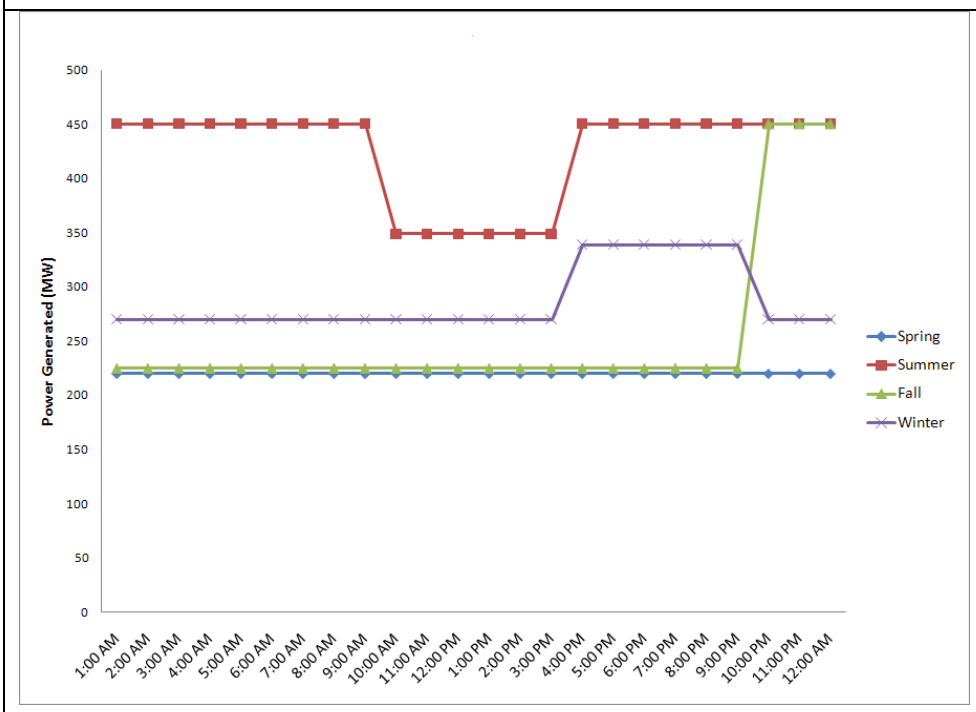

Figure 71: Hourly Biomass Power by Season When Power Output follows Electricity Demand

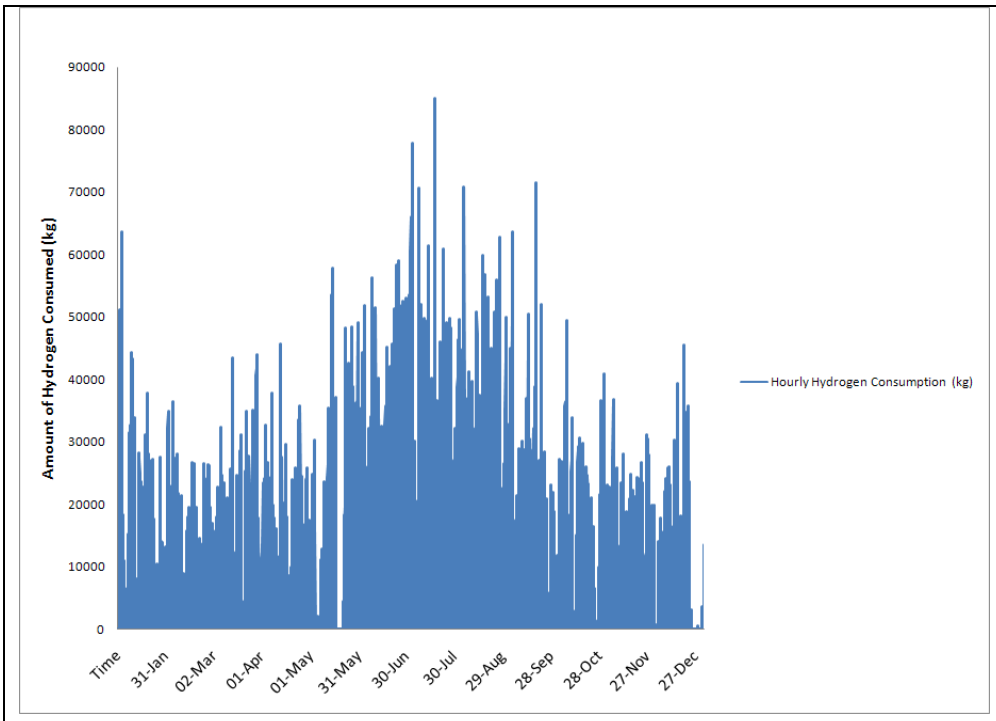

Figure 72: Hourly Hydrogen Consumed by Fuel Cell for Sample Run (2170 MW Nuclear Capacity with all Potential Renewable Energy Sources Used)

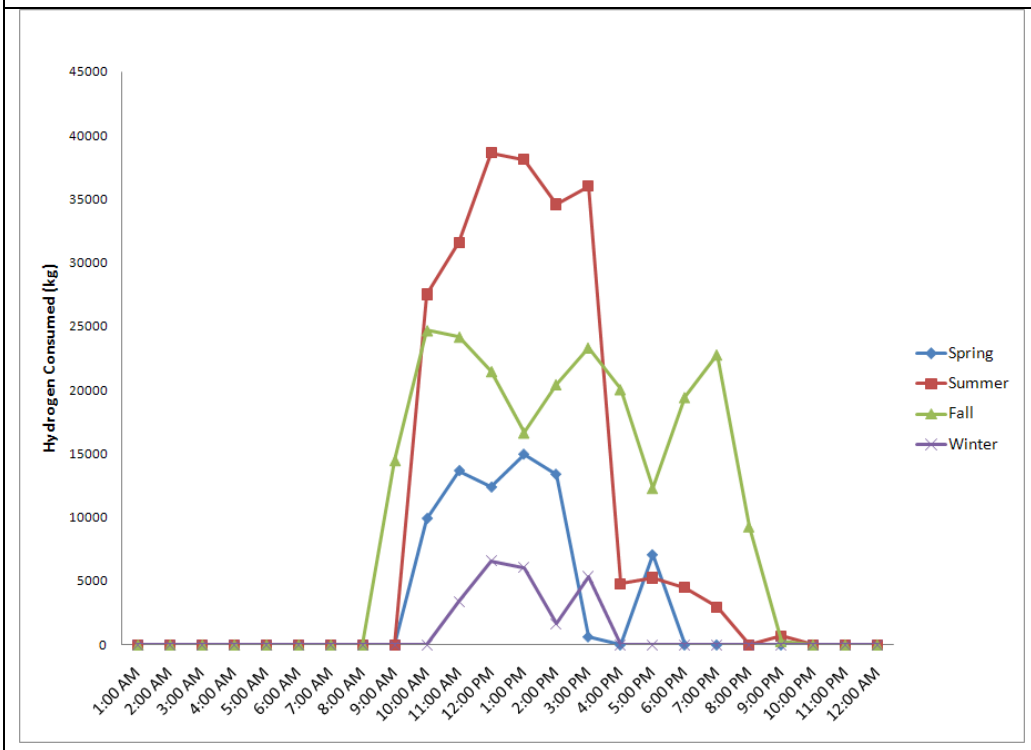

Figure 73: Daily Profile of Hourly Hydrogen Consumed by Fuel Cell

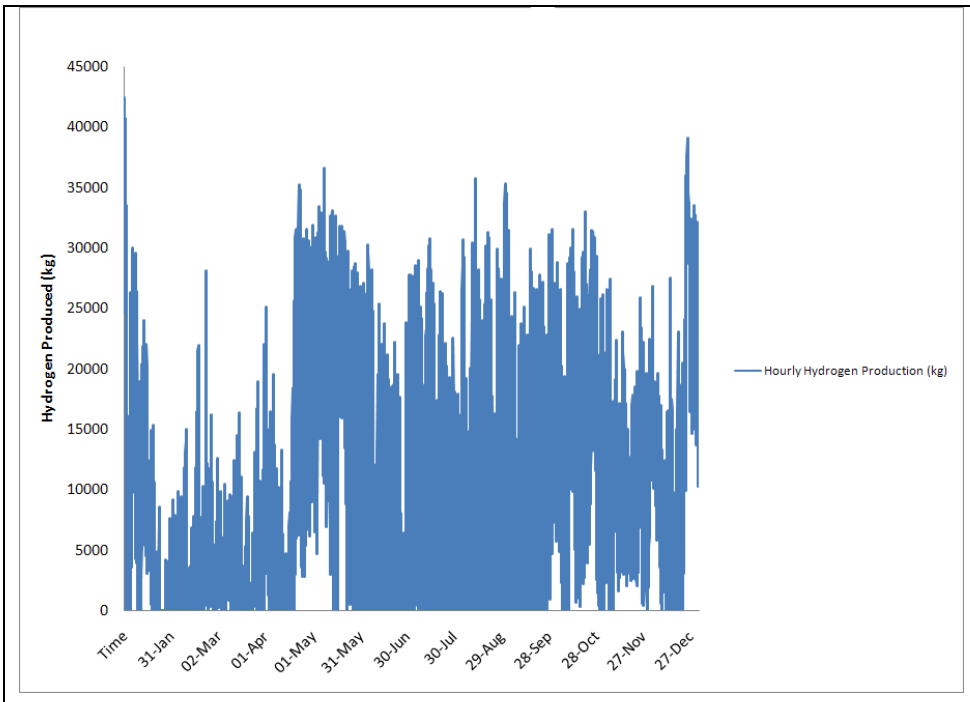

Figure 74: Hourly Hydrogen Produced by Electrolyzers for Sample Run (2170 MW Nuclear Capacity with all Potential Renewable Energy Sources Used)

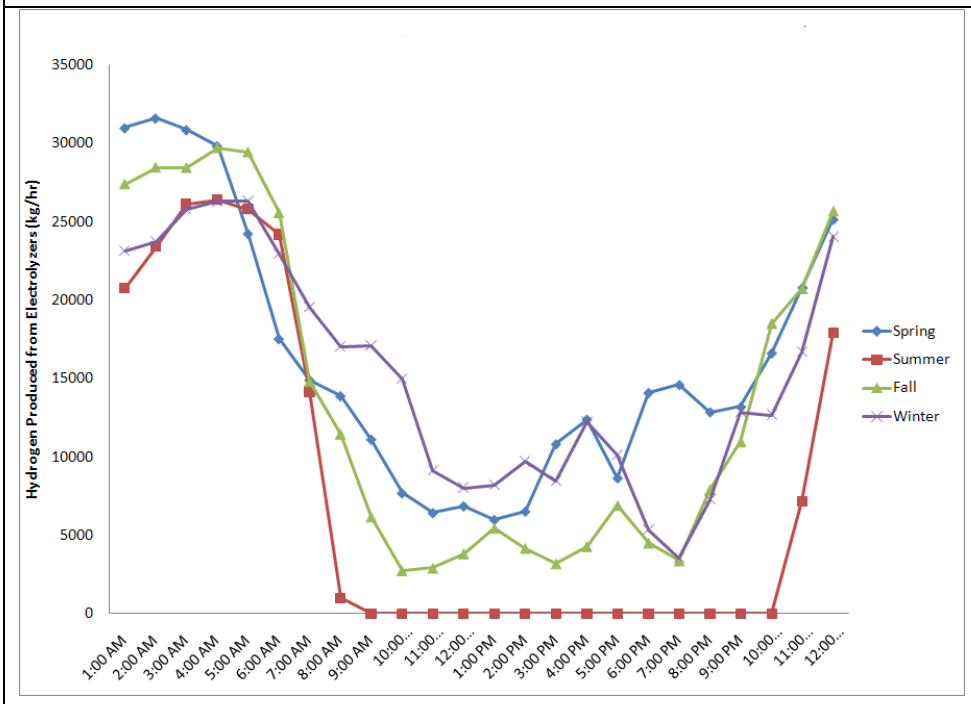

Figure 75: Daily Profile of Hourly Hydrogen Produced by Electrolyzers by Season

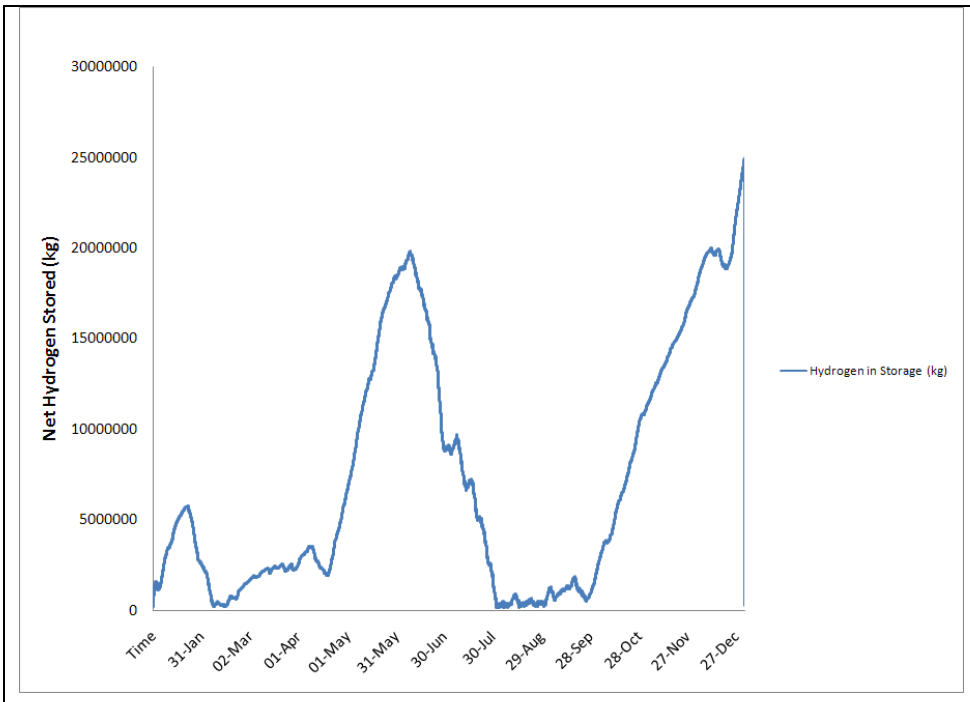

Figure 76: Hourly Profile of Net Hydrogen Stored Underground for Sample Run (2170 MW Nuclear Capacity with all Potential Renewable Energy Sources Used)

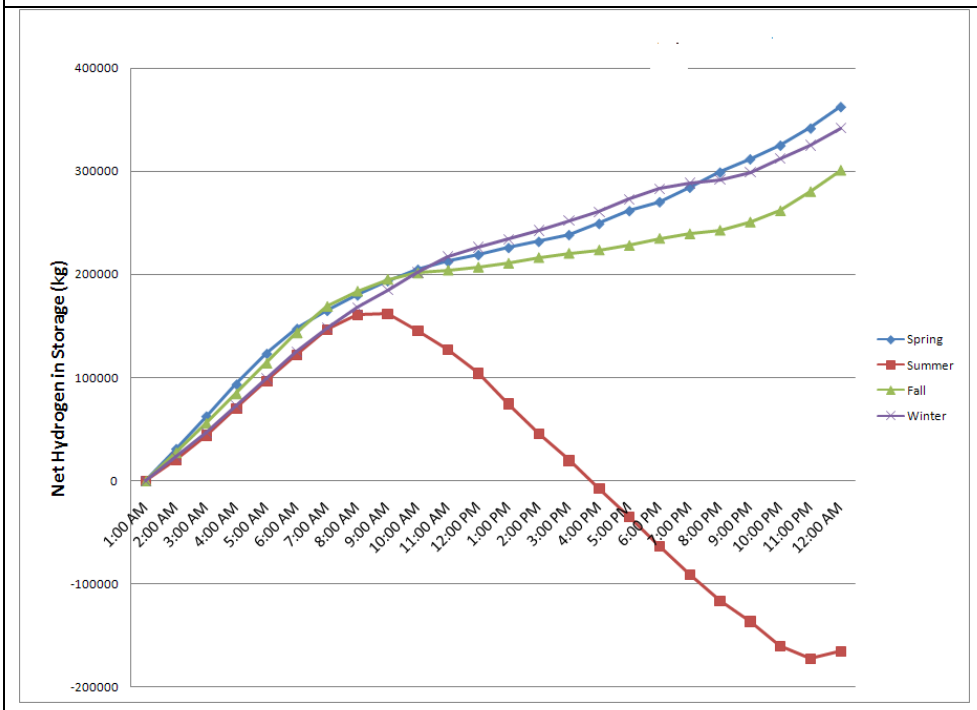

Figure 77: Hourly Profile of Net Hydrogen Stored for a Given Day for Each Season

Table 56 outlines the costs and revenues involved in the energy hub. As observed, nuclear cost, electrolyzer cost, and fuel cell cost take up the lion's share of hub costs. Therefore, small changes in per unit costs for any of these technologies will result in significant movement towards hub profitability. Likewise, revenue from emission trading and electricity play the most important role for hub revenues. On further analyzing hub revenues, it was observed that 95% of the emissions revenues came from off-setting carbon emissions. The total emissions revenue from transportation and industry takes into account the potential revenue gained from sequestering carbon dioxide, and by avoiding healthcare costs by reducing air pollution emissions typically emitted from using gasoline for transportation, and natural gas for hydrogen. A cost benefit was also assigned the reduction of other air pollutants that contribute to increasing healthcare costs, and discussion of this methodology can be found in section 3.2.10. Therefore, small increases in electricity pricing, and / or increases in carbon trading price, will result in significant movement towards hub profitability. On dividing the revenue generated from hydrogen sales by the amount of excess hydrogen generated, the levelized price was found to be $ 4.32 per kg. This also indicates that very little hydrogen was purchased during the year to meet peak electricity demand. The effective hub cost per MWh takes into account any hydrogen that was purchased to meet peak electricity demand. If the net hydrogen revenue was found to be negative, their values are added to the hub costs in order to obtain the effective hub cost to meet electricity demand using the technologies chosen for this hub.

Table 56: Results Obtained for Sample Scenario Considered (2170 MW Nuclear Capacity with all Potential Renewable Energy Sources Used)

Output Parameter	Value
Total Solar Cost / yr	3,479,100.35
Total Wind Cost / yr	90,885,038.98
Total Nuclear Cost / yr	1,058,122,029.21
Total Biomass Cost / yr	77,888,258.47
Total Electrolyzer Cost / yr	542,468,607.13
Total Fuel Cell Cost / yr	549,061,253.95
Total Hydrogen Storage Cost / yr	50,865,846.10
Total Oxygen Storage Cost / yr	50,537,943.41

Total Hub Cost / yr	**2,423,308,077.60**
Total Electricity Revenue / yr	941,760,725.82
Total Hydrogen Revenue / yr	106,982,195.10
Total Utility Emission Revenue	454,355,825.39
Total Emissions Revenue from Transportation and Industry	9,863,747.07
Total Emissions Revenue	**464,219,572.46**
Total Hub Revenue / yr	1,509,195,315.16
Profit or Loss / yr	**-914,112,762.43**
Hydrogen Surplus (kg)	24,777,015.26
Plant Cost /MWh	143.47
Total MWh Energy For Utilities	16,867,752.50
Additional Balance of Plant Cost per MWh (if net H_2 revenue was negative)	0.00
Eff Plant Cost Dollars per MWh	**143.69**

Table 57 outlines the costs and revenues generated through electricity production for each of the technologies considered for this simulation. As observed, all the technologies proved to be more expensive per MWh compared to the revenue generated. This indicates that either the price of electricity per MWh and / or the price of CO_2 per tonne would have to increase to make this configuration of the clean energy hub economical. Furthermore, it can be observed that only 28.9% and 27.1% of the electrolyzer and fuel cell capacity is used on average. This results in significant yearly hub costs due to high capital costs for both fuel cells and electrolyzers as outlined in Tables 56. Therefore, this is an area that can be optimized to further reduce costs by utilizing more of the peak capacity of these expensive components by reducing the size of electrolyzers and fuel cells, or adding new lesser expensive technologies such as a

very limited amount of coal that can partially replace fuel cells in meeting peak electricity demand.

Table 57: Average Prices per MWh for each Technology Used for the Sample Scenario (2170 MW Nuclear Capacity with all Potential Renewable Energy Sources Used)

Output Parameter	Value	Units
Average Solar Revenue	59.27	$ / MWh
Average Wind Revenue	51.58	$ / MWh
Average Nuclear Revenue	51.68	$ / MWh
Average Biomass Revenue	54.73	$ / MWh
Average Fuel Cell Revenue	51.77	$ / MWh
Maximum Electrolyzer H_2 Generation Capacity	39680	Kg / h
Maximum Fuel Cell Power Demand	1592.30	MW
Average Electrolyzer H_2 Generation Capacity	11420	Kg / h
Average Fuel Cell Power Demand	431.10	MW
Average Solar Cost	426.40	$ / MWh
Average Wind Cost	99.54	$ / MWh
Average Nuclear Cost	86.11	$ / MWh
Average Biomass Cost	134.87	$ / MWh
Average Electrolyzer Cost	124.88	$ / MWh
Average Fuel Cell Cost	493.40	$ / MWh

4.2 Comparison of Different Technology Options

Underground vs. On-Ground Hydrogen Storage for Different Nuclear Capacities

Figure 78 outlines a sample hydrogen storage profile when stored underground if a 2170 MW nuclear reactor capacity is used, whereas Figure 79 outlines a sample hydrogen storage profile where hydrogen is stored in 20-40 kg storage tanks on ground for the same nuclear capacity. In order to prevent the net hydrogen from going below zero, pure hydrogen is purchased from industry during periods of high demand to ensure there is always some hydrogen in storage tanks. As observed in the below figures, the amount of hydrogen in underground storage is

significantly higher than on-ground storage tanks, it is also observed that the extent of increases and declines in net hydrogen stored in Figure 79 is not observed in Figure 78. This is due to the logic for the simulation for on-ground hydrogen storage systems where if the net amount of hydrogen in the tank is greater than 500,000 kg, the fuel cells are required to meet the grid electricity demand by consuming the excess hydrogen before nuclear and biomass reactors can ramp up their power generation (i.e. to reduce the storage requirement). This leads to increased amount of grid power demand being handled by fuel cells, thereby leading to higher number of fuel cell systems installed to meet peak demand, and, as a result, raises the cost of the hub. While this leads to reduced storage costs, it increases the cost of producing electricity, as electricity generation from fuel cells is more expensive compared to nuclear and biomass electricity generation. Figure 80 compares the total hub cost per MWh for electricity generation considering underground and on-ground storage for different nuclear reactor capacities.

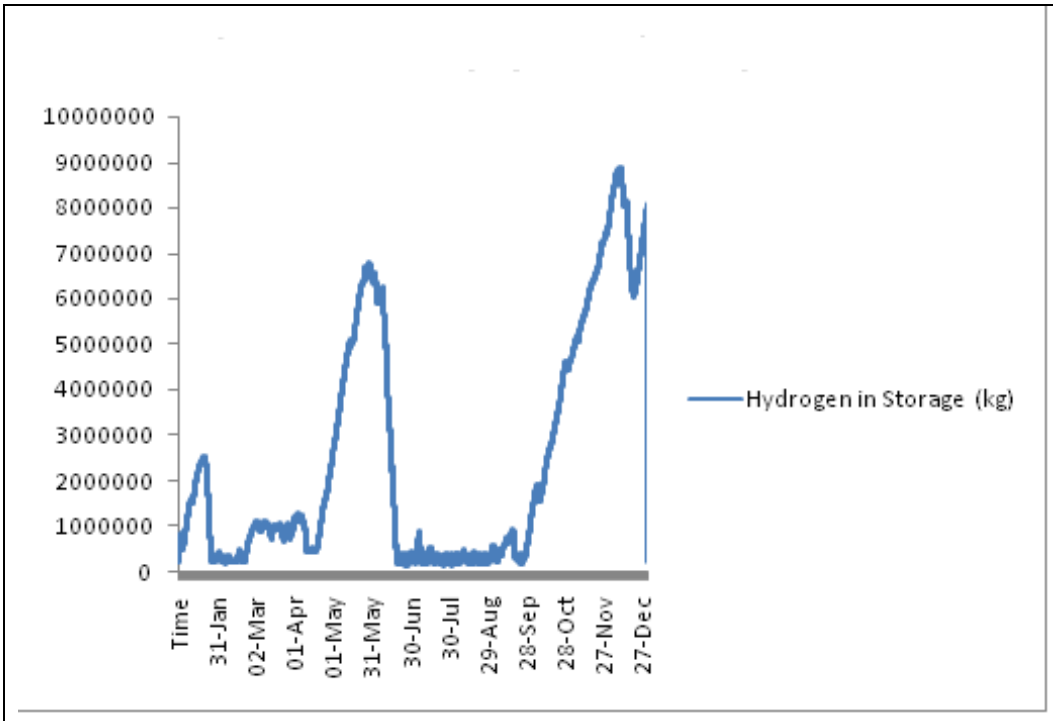

Figure 78: Sample Underground Hydrogen Storage Profile for 2170 MW Nuclear Capacity

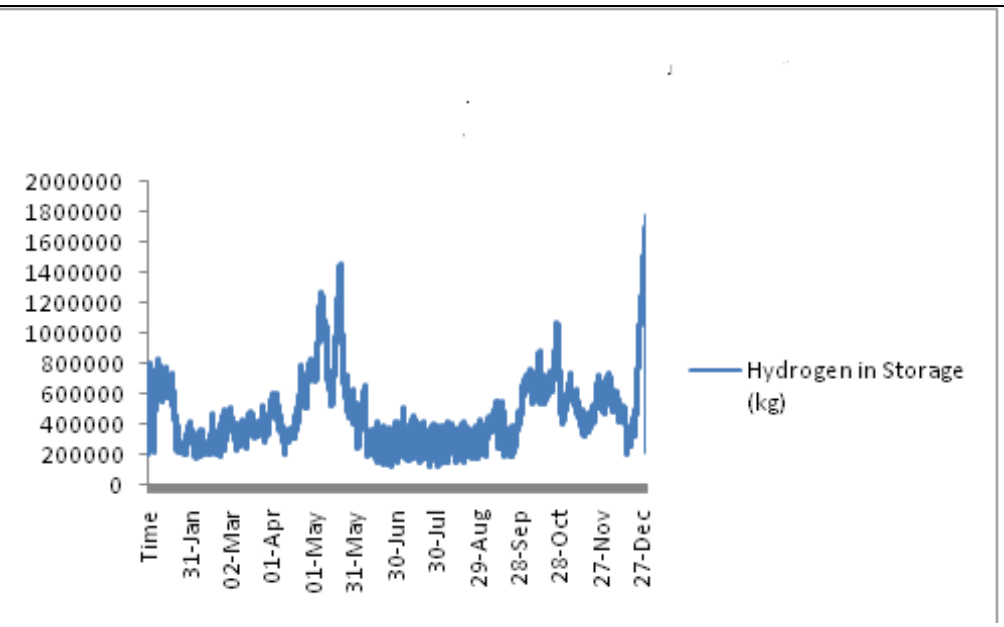

Figure 79: Sample Profile of Hydrogen Stored in 20-40 kg Storage Tanks for a 2170 MW Nuclear Capacity

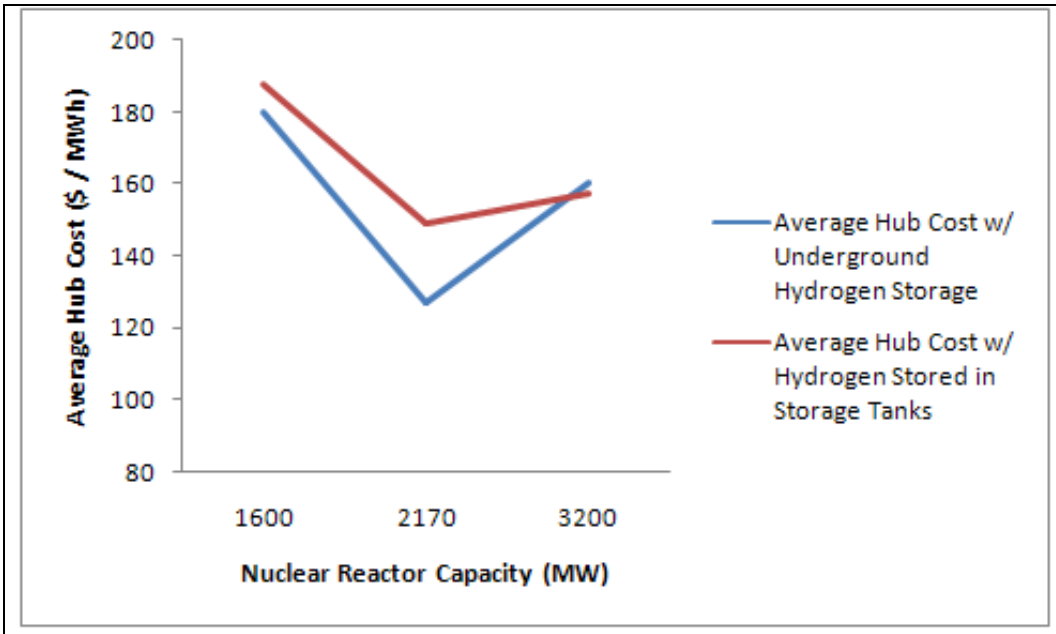

Figure 80: Comparison of Hub Costs for Underground Hydrogen Storage vs. Storage in Hydrogen Tanks

As observed in the figure above, the plant costs are lower for underground hydrogen storage for all three reactor sizes. The average hourly electricity demand from the Nanticoke grid is 2081 MWh. While the costs are lowest in conjunction with 2170 MW nuclear reactor capacity, the difference in overall hub costs between storage options diminishes as the nuclear reactor capacity sizes increase or decrease. Figure 81 outlines comparison of maximum fuel cell power needed for different nuclear reactor capacities. Given the maximum electricity demand for the grid considered is 3601 MW, as the size of nuclear reactor capacity increases, the power demand from fuel cells decreases. However, as observed for hydrogen storage in tanks, the fuel cell power demand does not decrease significantly when nuclear reactor capacity increases from 2170 to 3200 MW. This indicates that 3200 MW capacity nuclear reactors are underutilized when hydrogen is stored in storage tanks in order to avoid excessive hydrogen production. It also signifies that underground hydrogen storage significantly reduces fuel cell capacity requirements, thereby reducing yearly fuel cell costs. In future analysis the size of the tank could also be influenced by a constant hydrogen economy demand such as a large number of hydrogen vehicles, or a hydrogen 'GoTrain'.

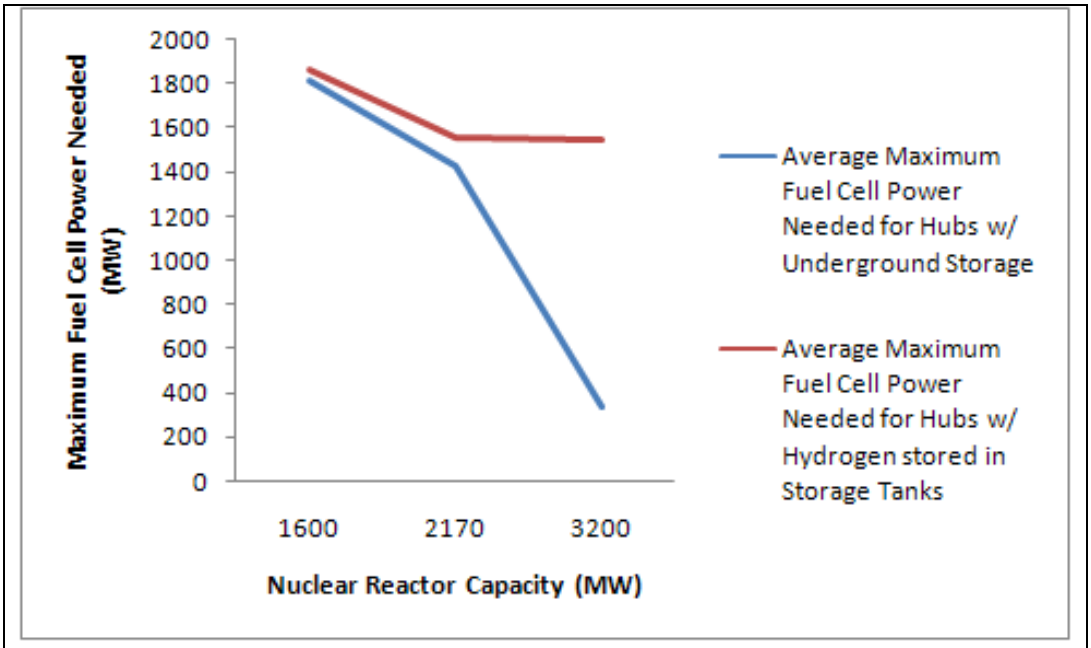

Figure 81: Comparison of Maximum Fuel Cell Power Needed for Underground Hydrogen Storage vs. Hydrogen Stored in Storage Tanks for Different Nuclear Capacities

When Figures 80 and 81 are compared, it is noted that the total hub cost for underground hydrogen storage for 3200 MW nuclear reactor capacity is very similar to that of hydrogen stored in storage tanks despite a significant drop in the maximum fuel cell capacity needed. This indicates that for the 3200 MW nuclear reactor option, significantly higher amount of hydrogen is generated during underground storage, than when hydrogen is stored in storage tanks, thereby increasing hydrogen storage costs per unit of hydrogen. Therefore, from the above analysis, it can be concluded that unless there is a market for the excess hydrogen produced by the hub, it is most economical to store excess hydrogen produced underground, choose the 2170 MW nuclear reactor capacity, and minimize the amount of excess hydrogen produced by controlling more flexible reactors such as coal and biomass to keep hydrogen storage costs low, and consequently the overall clean energy hub costs low.

High Electrolyzer Capacity vs. Low Electrolyzer Capacity for Different Nuclear Options

Figures 82 and 83 outline the effect of electrolyzer capacity on hub costs and maximum fuel cell power needed. While hub costs are lower for lower electrolyzer capacity, it is also observed that the difference in effects in hub cost between minimum and maximum number of electrolyzers increases as the nuclear reactor capacity increases. This indicates that as nuclear reactors and electrolyzer sizes get bigger, there is more potential to convert excess power into hydrogen. However, the incremental cost of adding another electrolyzer becomes more expensive with increasing reactor sizes, because of the higher probability that the additional electrolyzer capacity may not be used most of the time, thereby raising the incremental hub cost per year due to high electrolyzer capital costs. In addition, as observed in Figure 83, increase in number of electrolyzers with a capacity of 8,000 kg H_2 per hour (or 100 electrolyzers) to 40,000 kg H_2 per hour (or 500 electrolyzers) does not have a significant impact on the maximum number of fuel cells needed. Therefore, it can be concluded that electrolyzer capacity has limited impact on the maximum number of fuel cells needed, and their number must be kept to a minimum to ensure most of their capacity is utilized year round in order to keep hub costs low.

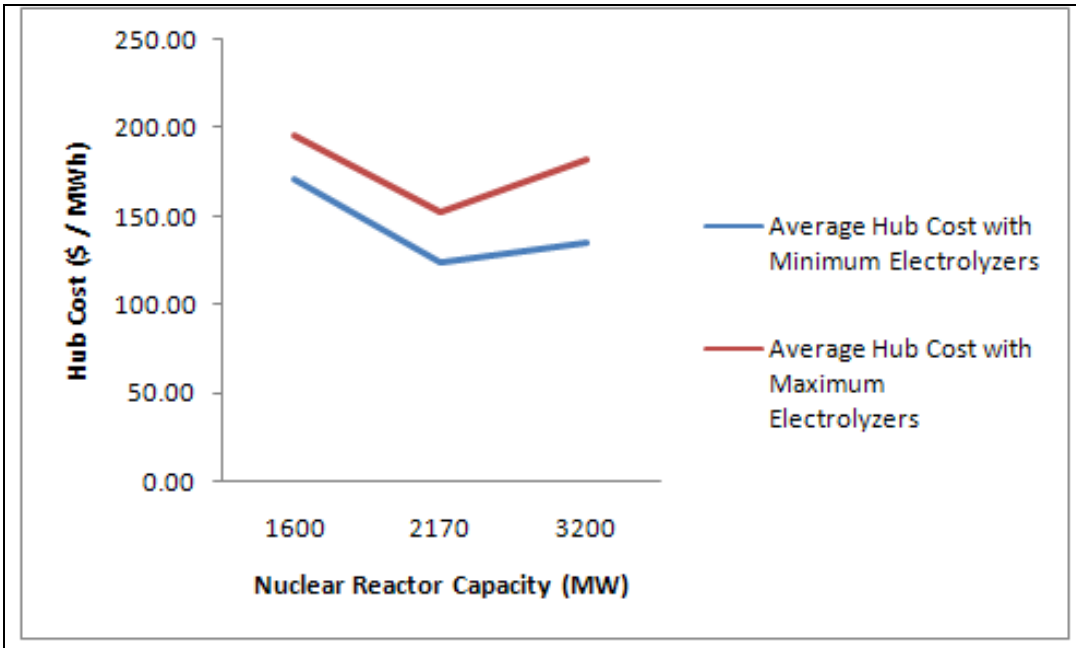

Figure 82: Comparison of Electrolyzer Size with Energy Hub Cost for Different Nuclear Reactor Sizes

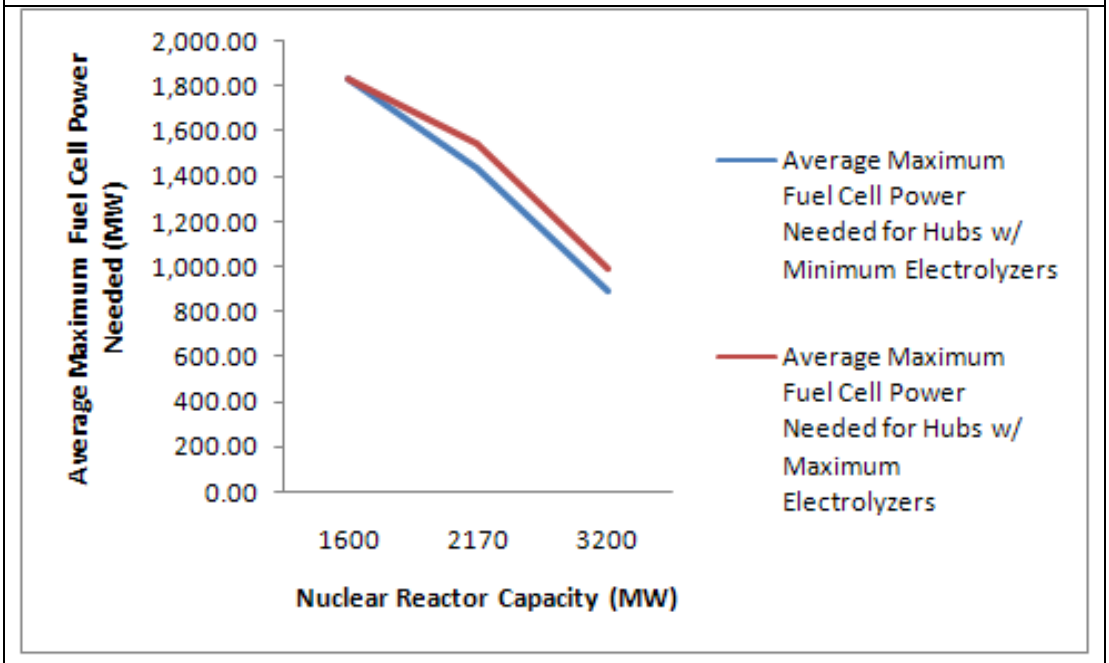

Figure 83: Comparison of Electrolyzer Size with Resulting Fuel Cell Power Demand for Different Nuclear Reactor Sizes

Fuel Cell and Electrolyzer Capacity Utilization

Figure 84 compares the price per MWh of fuel cell electricity generation versus price per MWh of electrolyzer energy consumption with increasing nuclear reactor sizes. The main difference between the two technologies is that the electrolyzer capacity is constrained whereas the fuel cell capacity is not. It is observed that as the size of nuclear reactors rise, the cost per MWh of the electrolyzer drops whereas that of fuel cell increases. This signifies that with increasing nuclear reactor size, more electrolyzer capacity is used, whereas with fuel cells, there is excess unused capacity due to the ability of other technologies to meet peak electricity demand. Therefore, it can be concluded that the cost of conversion of hydrogen to electricity using fuel cells increases with increasing nuclear reactor capacity (because of the decrease in fuel cell utility), whereas the cost of producing hydrogen using electrolyzers diminishes with increasing nuclear capacity.

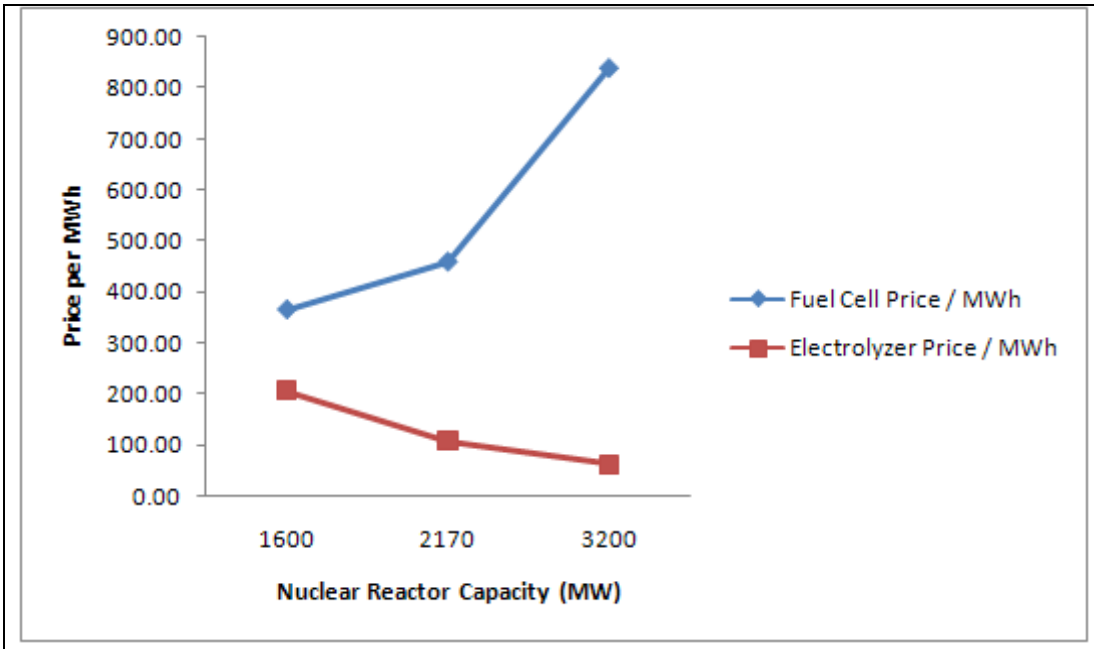

Figure 84: Comparison of Fuel Cell Price per MWh vs. Electrolyzer Price per MWh with Increasing Nuclear Reactor Capacity

Profit Analysis for Each of the Technologies

The clean energy hub is designed to obtain revenues from a variety of sources: electricity demand, hydrogen for industry and transportation, and emissions revenue. While clean energy sources such as wind, solar, and nuclear lead to higher emissions reductions, and electrolyzers lead to hydrogen production for utilities and transportation, it is important to analyze the

impact of these technologies on hub profitability. Table 58 outlines the profit analysis for each of the considered technologies. The average profit for each of the technologies is calculated by taking the average profit of all the simulation runs when the technology was not used or its capacity was minimized, and is compared with the average profit when the technology was used. Table 59 outlines the average price per MWh obtained for each of the technologies considered. This indicates that while off-shore wind, biomass power, and coal power contribute towards attaining profitability, on-shore wind, solar panels, and electrolyzer technology contribute against attaining profitability. Biomass and coal plants appear to contribute heavily towards profitability primarily because of their ability to off-set electricity produced from fuel cells during peak demand. Figure 85 analyzes the profit for the hub attained versus the amount of fuel cell power needed. It is observed that every MW of fuel cell capacity needed reduces the hub profitability by roughly $3,000,000 per year. Given the average cost of fuel cell based electricity is roughly $ 435 per MWh, and the average revenue from electricity power is roughly $ 55 per MWh, use of fuel cell power becomes very expensive.

Table 58: Comparison of Profitability of All the Power Generation Technologies Considered

Technology	Condition 0	Average Profit ($ millions)	Condition 1	Average Profit ($ millions)	Average Yearly Technology Profit Change
Off-Shore Wind	None	-475.59	150 turbines	-473.87	1,720,000
On-Shore Wind	None	-473.94	66 turbines	-475.51	-1,570,000
Biomass	None	-509.6	455 MW Capacity	-439.9	69,700,000
Coal	None	-494.2	300 MW Capacity	-455.3	38,900,000
Solar	None	-477.14	50500 m^2 of PV Cells	-472.3	-4,840,000
Electrolyzer	100	-364.72	500	-584.73	-220,010,000

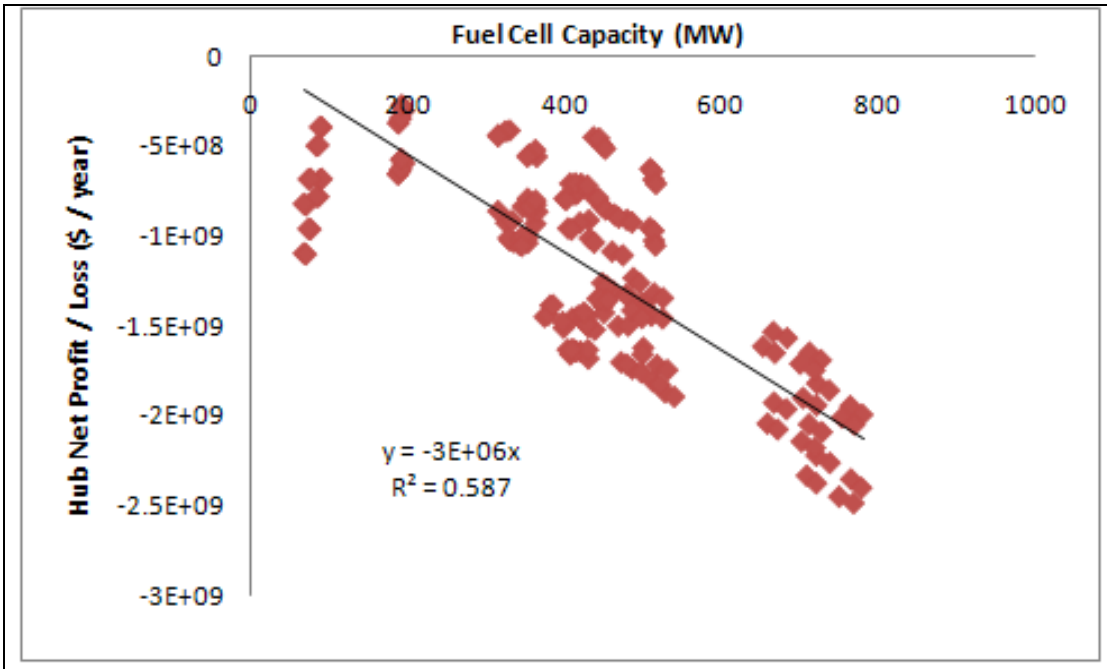

Figure 85: Analysis of Fuel Cell Capacity Needed (MW) vs. Yearly Profitability

Table 59: Average Costs per MWh Obtained for Each of the Technologies Considered

Technology	Average Price / MWh
Off-Shore Wind	$ 95.81 / MWh
On-Shore Wind	$ 109.99 / MWh
Biomass	$ 117.94 / MWh
Coal	$ 47.72 / MWh
Solar	$ 426.42 / MWh
Electrolyzer	$ 126.60 / MWh
Fuel Cell	$ 435 / MWh
Nuclear Reactors	$ 72.01 / MWh

Therefore, from the above analysis, it can be concluded that electricity generation from fuel cells is less profitable even after considering the environmental benefits of generating clean electricity from fuel cells due to high capital cost for fuel cell stacks, and the intermediate

inefficiencies involved. It can also be concluded that off-shore wind, and biomass plants are more economically viable compared to other technologies when considering revenues from environmental emissions.

4.3 Analysis of Results Obtained for Each Scenario

Various technologies are considered for each scenario. Nuclear reactor capacities range from 1600 MW to 3200 MW. While the numbers of fuel cell stacks used are unbounded, biomass, and coal are used, if needed, only to meet peak electricity demand. The maximum hydrogen generation capacity of electrolyzers ranges 8000 kg per hour to 40000 kg per hour. Biomass options include a maximum of 361.5 MW of refuse derived fuel (RFD), 93.5 MW of wood chips, and a 300 MW coal plant. 300 MW capacity off-shore wind turbines, 100 MW capacity on-shore wind turbines, and 5 MW of solar panels are also considered as technology options for the hub.

4.3.1 Scenario 1: Meeting Electricity Demand Only – Lowest Electricity Cost

This scenario is indicative of the period when a hydrogen economy has not yet developed, and, as a result, any excess hydrogen generated would have less value. However, there is growing interest in reducing power losses, and taking advantage of storing energy generated from renewable technologies in the form of hydrogen during off-peak hours, and then using this hydrogen to produce electricity using fuel cells. This results in more usable power generation from clean renewable intermittent sources, and results in emissions benefits by averting environmental and human health damage from coal power. Therefore, the objective for this scenario will be to meet the required electricity demand for the grid (based on historic IESO data from this grid connection), at the lowest price per MWh.

Table 60 outlines the top five technology mix options that are able to meet electricity demand at lowest possible hub costs. Table 61 outlines the output parameters associated with the technology options. From the tables it can be observed that clearly high electrolyzer capacity, high nuclear reactor capacity, and consequently a large amount of fuel cell demand are not considered favourable options to meet electricity demand at a low hub cost. Since the average grid electricity demand for this hub is 1957 MW, a 2170 nuclear reactor running at full capacity at all times was observed as the most economical option. Likewise, it can be observed

that all of the fossil based options such as coal are part of the low cost energy hub. This indicates the need for options other than fuel cells to meet peak electricity demand. Furthermore, it can be observed that the highest emissions reduction is for the coal only option (i.e. no biomass). This is primarily due to the decreased coal reactor capacity (300 MW) compared to biomass reactor capacity (455 MW). The upper limit on coal capacity forces fuel cell demand higher. However, the relatively low yearly costs of coal plants enhances its ability to absorb the higher costs for fuel cell stacks, use more of the total fuel cell capacity, and is as a result able to garner more emissions revenue by incorporating wind, and solar technologies. It is important to note though that in this work biomass was assumed to be an emitter of CO_2, but clearly somewhere else in the life cycle carbon is captured to grow the biomass. Furthermore, it can be observed that nuclear reactors and coal, followed by biomass, followed by off-shore wind turbines, followed by on-shore wind turbines, followed by solar panels represents the sequence of technology adoption in order to maximize environmental benefits. However, this would have to be supported either by higher electricity pricing, or higher carbon trading pricing. A 15% increase in electricity pricing, thereby averaging $ 63.25 per MWh, and since CO_2 pricing represents 95% of the total emissions revenue as observed from previous simulation runs, a 52 % increase in CO_2 pricing, thereby raising the estimated CO_2 price from $ 25 per tonne to $ 38 per tonne would make all of the considered hub configurations options in Table 60 profitable. It can also be observed that the availability of solar, and wind power is limited compared to fossil and nuclear energy sources. As observed in Table 61, only 26-27% of the stated wind power capacity is realistically available as usable power over the course of the year. Similarly only 18% of the stated solar power capacity is available over the course of the year. While these numbers are affected by the location of turbines, and solar panels, they also represent the intermittent nature of both these sources. Therefore, although the stated capacity of wind and solar systems is 405 MW, realistically, only 107 MW of power (26%) of this stated capacity can be expected from these sources to meet grid electricity demands. Consequently, renewable play a smaller role as a percentage of total energy produced as outlined in Table 61. It is important to observe though that increased role of biomass in electricity generation for the hub resulted in lower costs per MWh for the hub. Given that biomass supply in the region tends to be readily available, and since only 24-31% of installed biomass capacity was used for this system, the role of biomass reactors can be significant in

utilizing more renewable resources, especially given that biomass would be carbon neutral when a life-cycle analysis is performed for biomass. However, a detailed analysis of transportation costs (economic costs and emission costs) of biomass will have to be performed.

Table 60: Technology Options for Meeting Grid Electricity Demand with the Lowest Hub Cost

	Rank 1	Rank 2	Rank 3	Rank 4	Rank 5
Solar PV Cells Capacity	0 MW	5 MW	5 MW	0 MW	5 MW
Biomass Options	Wood , RFD, Coal	Wood, RFD, Coal	Wood, RFD, Coal	Wood, RFD, Coal	Coal
Wind Turbine Capacity	0 MW	300 MW	100 MW	400 MW	400 MW
Nuclear Capacity	2170 MW	2170 MW	2170 MW	2170 MW	2170 MW
Electrolyzer H_2 Generation Capacity	8000 kg / h	8000 kg / h	8000 kg / h	8000 kg / h	8000 kg / h
Hydrogen Storage Option	Underground	Underground	Underground	Underground	Underground

Table 61: Analysis of Technologies Considered for Scenario 1 – Lowest Cost Electricity (Ranked based on Lowest Hub Cost)

	Rank 1	Rank 2	Rank 3	Rank 4	Rank 5
Total Hub Cost $ / yr	**1,754,455,072**	**1,754,911,712**	**1,761,846,456**	**1,761,968,463**	**1,725,225,333**

Total Fuel Cell Cost $ / yr	373,233,294	339,329,950	361,401,715	332,916,558	410,287,162
Total Biomass Cost $ / yr	194,259,433	156,342,593	182,073,477	145,413,557	28,632,000
Total Electricity Revenue $ / yr	952,050,110	952,050,110	952,050,110	952,050,110	952,050,110
Total Emissions Revenue $ / yr	**432,053,715**	**422,217,723**	**434,881,262**	**424,658,688**	**447,521,892**
Total Hub Rev $ / yr	**1,403,298,486**	**1,415,254,583**	**1,415,028,163**	**1,422,994,404**	**1,364,191,977**
Profit or Loss $ / yr	**-351,156,586**	**-339,657,130**	**-346,818,293**	**-338,974,060**	**-361,033,357**
Plant Cost /MWh	102.34	102.37	102.77	102.78	100.74
Addnl Plant Cost / MWh	0.00	0.00	0.00	0.00	2.06
Eff Plant Cost / MWh	**102.34**	**102.37**	**102.77**	**102.78**	**102.80**
Electrolyzer % of Total Capacity Used	76%	77%	76%	78%	78%

Fuel Cell % of Total Capacity Used	24%	25%	25%	26%	34%
Off-Shore Wind % Pwr Cap Used	0%	26%	0%	26%	26%
On-Shore Wind % Pwr Cap Used	0%	0%	27%	27%	27%
Solar % Pwr Cap Used	0%	18%	18%	0%	18%
Biomass % Pwr Cap Used	31%	24%	27%	23%	0%
Coal % Pwr Cap Used	100%	100%	100%	100%	100%
Nuclear % Pwr Cap Used	100%	100%	100%	100%	100%
% Total Energy Nuclear	91.23%	89.51%	90.54%	88.89%	92.59%
% Total Energy Biomass	5.89%	4.46%	5.42%	4.05%	0.00%
% Total Energy Wind	0.00%	3.17%	1.14%	4.27%	4.45%

% Total Energy Solar	0.00%	0.04%	0.04%	0.00%	0.04%
% Total Energy Coal	2.88%	2.83%	2.86%	2.81%	2.92%

4.3.2 Scenario 2: Meeting Electricity Demand and Serving 'Hydrogen Economy'

This scenario is indicative of the period when a hydrogen economy is developed, and, as a result, any excess hydrogen generated can be sold either for industrial use such as making fertilizers, or to the transportation sector for hydrogen cars, trucks, rail and hydrogen-run forklifts. Therefore, this scenario provides the flexibility to produce as much hydrogen as possible with the technologies available while meeting grid electricity demand. Hence, the objective here would be to maximize profit from the clean energy hub by selling both electricity and hydrogen. Since the actual hydrogen demand for industry and transportation are not known, the model assumes 50% of all the accumulated hydrogen is sold to industry at the end of the year, and the other half is sold to the transportation sector at end of the year prices. Since hydrogen for industry and transportation typically provide more revenue than hydrogen for utilities, the profitability of the hub is expected to increase in this scenario. Table 62 outlines the top five technology options that are able to meet grid electricity demand, and maximize profit by selling hydrogen.

For this scenario, 3200 MW nuclear reactor capacity is predominantly chosen to enhance hub profitability. As observed in Table 63, while biomass is chosen, it does not play an active role in generating electricity, as the nuclear reactors, and other renewable technologies are able to handle most of the peak demand requirements. However, it was interesting to observe that solar power was the next least expensive technology to impact hub profit, followed by on-shore wind turbines, followed by off-shore wind turbines.fix. This indicates signs of power losses, where power generated from solar, and wind are not needed in most cases and are wasted if electrolyzers are already running at capacity. Fig 86 outlines the power loss experienced when a 3200 MW nuclear reactors run on peak capacity throughout the year. On the other hand, using electrolyzers with a hydrogen generating capacity of 40000 kg per hour is too high, and leads to underutilization of electrolyzer capacity. Therefore, it can be concluded that a larger

number of electrolyzers are needed to perform a better analysis of technology options to determine price points at which more renewable technologies can be used towards hydrogen generation. The average effective hydrogen price of $ 4.82 per kg out of a maximum possible $ 4.85 per kg indicates sufficient hydrogen was produced to meet hydrogen demands for fuel cells when needed. For all the hubs considered, the average hydrogen produced at the end of the year was 67 million kg. Given that there are roughly 3.13 million cars in GTA, if we assume a car would consume 200 kg of hydrogen per year (16000 kilometres / yr * 80 kilometres / kg), then this is enough hydrogen to serve 10.7 % of the automobile industry. Based on work done by (Liu, Fowler et. al, 2009), this is a probable scenario for years 2025 and beyond. Currently hydrogen pricing for transportation is based on a current average yearly gasoline price of $1 per litre. However, as outlined in section 3.2.8, if gasoline prices are expected to increase by 3.85% per year over the next 20 years, the levelized price of gasoline works out to $1.42 per litre. Therefore, a 5% increase in gasoline prices from current levels (levelized price of $1.50 per litre over the next 20 years), and, therefore hydrogen prices for transportation, and an increase of CO_2 pricing to $ 35 per ton without any increase in electricity prices, would make all of the hub options considered for this scenario profitable. Further simulations for 3200 MW nuclear reactor capacity could be performed with the following conditions:

1) Electrolyzers should be capable of generating 10000 – 20000 kg / h of hydrogen; and,
2) Nuclear reactors could be optimized by varying the output according to the grid electricity demand to minimize power losses, and operating costs for nuclear reactors.

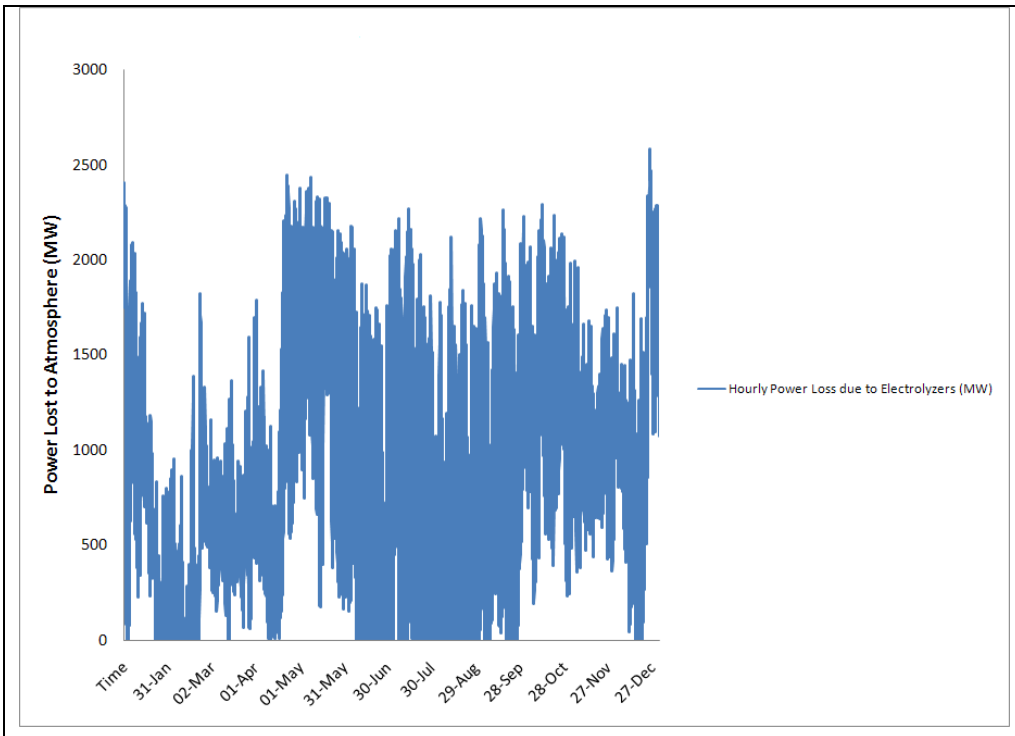

Figure 86: Hourly Power Loss to Atmosphere with 3200 MW Nuclear Reactors and Electrolyzer Hydrogen Generating Capacity of 8000 kg / h

Table 62: Technology Options for Meeting Grid Electricity Demand and Selling Hydrogen to Maximize Profit

	Rank 1	Rank 2	Rank 3	Rank 4	Rank 5
Solar PV Cells Capacity	0 MW	5 MW	0 MW	5 MW	5 MW
Biomass Options	0 MW	Wood, RFD	Wood, RFD	0 MW	Wood, RFD
Wind Turbine Capacity	0 MW	0 MW	100 MW	100 MW	300 MW
Nuclear Capacity	3200 MW	3200 MW	3200 MW	3200 MW	3200 MW

Electrolyzer H_2 Generation Capacity	8000 kg / h	8000 kg / h	8000 kg / h	8000 kg / h	8000 kg / h
Hydrogen Storage Option	Underground	Underground	Underground	Underground	Underground

Table 63: Analysis of all Potential Technologies for Scenario 2 (Ranked based on Highest Profit)

	Rank 1	Rank 2	Rank 3	Rank 4	Rank 5
Total Hub Cost $ / yr	**1,901,582,817**	**1,903,688,028**	**1,925,931,889**	**1,927,046,431**	**1,966,899,658**
Total Fuel Cell Cost $ / yr	94,595,535	94,595,535	92,698,441	92,304,670	89,904,615
Total Biomass Cost $ / yr	0	2,098,041	2,098,047	0	2,098,047
Total Electricity Revenue $ / yr	952,050,110	952,050,110	952,050,110	952,050,110	952,050,110
Total Emissions Revenue $ / yr	**503,648,287**	**503,286,086**	**503,472,023**	**503,910,520**	**485,542,438**
Total Hub Rev $ / yr	**1,773,807,712**	**1,773,412,542**	**1,776,515,654**	**1,777,256,688**	**1,763,876,697**

Profit or Loss $ / yr	**-127,775,106**	**-130,275,486**	**-149,416,234**	**-149,789,743**	**-203,022,961**
Hydrogen Revenue	319,183,767	319,526,818	322,249,419	322,551,858	326,997,095
Hydrogen Surplus (kg)	66,174,598	66,245,508	66,808,280	66,870,795	67,789,641
Eff H_2 Price ($ / kg)	**4.82**	**4.82**	**4.82**	**4.82**	**4.82**
Electrolyzer % of Total Capacity Used	94%	94%	94%	95%	95%
Fuel Cell % of Total Capacity Used	38%	38%	38%	39%	39%
Off-Shore Wind % Pwr Cap Used	0%	0%	0%	0%	26%
On-Shore Wind % Pwr Cap Used	0%	0%	27%	27%	0%
Solar % Pwr Cap Used	18%	18%	0%	18%	18%
Biomass % Pwr Cap	0%	0.4%	0.4%	0%	0.4%

Used					
Coal % Pwr Cap Used	0%	0%	0%	0%	0%
Nuclear % Pwr Cap Used	100%	100%	100%	100%	100%
% Total Energy Nuclear	99.97%	99.92%	99.10%	99.12%	97.58%
% Total Energy Biomass	0.00%	0.06%	0.06%	0.00%	0.06%
% Total Energy Wind	0.00%	0.00%	0.85%	0.85%	2.34%
% Total Energy Solar	0.03%	0.03%	0.00%	0.03%	0.03%
% Total Energy Coal	0.00%	0.00%	0.00%	0.00%	0.00%

4.3.3 Scenario 3: Meeting Electricity Demand and Maximizing Emissions Reduction

This scenario is indicative of the period when a hydrogen economy is well developed, and, as a result, any excess hydrogen generated can be sold either for industrial use such as making fertilizers, or to the transportation sector for hydrogen cars, trucks, and hydrogen-run forklifts. Therefore, this scenario provides the flexibility to produce as much hydrogen as possible with the technologies available while meeting grid electricity demand. However, the objective here is to maximize the environmental emissions reduction from all the electricity and hydrogen

generated from clean sources. The model measures the total emissions reduction, by maximizing revue from the sale of carbon credits, and credits for reduction in other air pollutants. Table 64 outlines the details of the technology mix for maximum emissions reduction. All renewable technologies and emissions free technologies have been chosen for this hub. Table 65 provides all the output parameters for this option.

Based on the overall hub cost per MWh of $ 156 per MWh, the hub could make a profit as is if electricity prices went up by 27% to $ 70 per MWh, or CO_2 prices went up by 60% to $ 40 per ton, or gasoline prices went up by 27% to a levelized cost of $ 1.80 per litre over the next 20 years. However, there is room for efficiency gains. As observed in Table 64, this is the only option where using electrolyzers capable of generating hydrogen at 40,000 kg per hour can be utilized. Nevertheless, the electrolyzers are still used at only 55% of their capacity. Therefore, smaller hydrogen generating capacities of around 25,000 kg per hour, and optimizing nuclear power to synchronize with grid electricity demand and hydrogen demand is needed to reduce costs. As can be observed, fuel cells are still an expensive method of generating electricity for utilities. As the size of nuclear reactor increases, the role of fuel cells in generating electricity during peak demand diminishes, thereby resulting in smaller capacities, and lower run times for the year. This increases the cost of generating electricity per MWh from an average of $ 435 per MWh to over $ 800 per MWh due to high capital costs, and underutilization. Therefore, it can be concluded that fuel cells are not a desirable option for generating electricity even after considering revenue from emissions credits. As the technology matures the cost of the fuel cell stacks will certainly drop, and with time the clean energy hub with more fuel cells will become profitable. It is more economical to convert excess power into hydrogen using electrolyzers and sell it to industrial sectors and transportation sectors as a high value commodity.

Table 64: Technologies Chosen to Maximize Emissions Reduction

Technology Option	Capacity
Solar PV Cells Capacity	5 MW
Biomass Options	0 MW
Wind Turbine Capacity	400 MW
Nuclear Capacity	3200 MW
Electrolyzer H_2 Generation Capacity	40000 kg / h
Hydrogen Storage Option	Underground

Table 65: Output Parameters for Hub with Greatest Emissions Reduction

Output Parameter	Value
Total Solar Cost $ / yr	3,479,100
Total Wind Cost $ / yr	90,885,039
Total Nuclear Cost $ / yr	1,560,364,283
Total Biomass Cost $ / yr	0
Total Electrolyzer Cost $ / yr	542,468,607
Total Fuel Cell Cost $ / yr	88,621,354
Total Hydrogen Storage Cost $ / yr	394,779,779
Total Hub Cost $ / yr	**2,680,660,095**
Total Electricity Revenue $ / yr	952,050,110
Total Hydrogen Revenue $ / yr	936,416,613
Total Utility Emissions Revenue $ / yr	459,027,604

Total Trans and ind Emissions Revenue $ / yr	77,135,516
Total Emissions Revenue $ / yr	**536,163,120**
Total Hub Revenue $ / yr	**2,424,629,843**
Profit or Loss $ / yr	-256,030,252
Hydrogen Surplus (kg)	193,758,807
Plant Cost $ / MWh	156.37
Total MWh Energy For Utilities	17,142,655
Addnl Plant Cost $ / MWh	0.00
Eff Plant Cost $ / MWh	**156.37**
Electrolyzer % of Total Capacity Used	55%
Fuel Cell % of Total Capacity Used	39%
Off-Shore Wind % Power Capacity Used	26%
On-Shore Wind % Power Capacity Used	27%
Solar PV % Power Capacity Used	18%
Biomass % Power Capacity Used	0%
Coal % Power Capacity Used	0%
Nuclear % Power Capacity Used	100%
% Total Energy Nuclear	96.82%
% Total Energy Biomass	0.00%
% Total Energy Wind	3.15%
% Total Energy Solar	0.03%
% Total Energy Coal	0.00%

Chapter 5 Conclusions and Future Work

5.1 Conclusions

A model for a clean energy hub has been developed and analyzed. This model is for an electricity and hydrogen generation facility that consists of nuclear reactors, solar photovoltaic cells, off-shore wind turbines, on-shore wind turbines, refuse derived fuel bioreactors, wood chips bioreactor, and limited use of coal boilers. Key to this clean energy hub is that the hub utilizes hydrogen as the energy vector to store energy and thus makes use of electrolyzer and fuel cell technology. Thus, hydrogen enables the use of intermittent renewable sources, and stable base load nuclear energy. These technologies are carbon emission free. Also considered was the generation of hydrogen to be used in the industrial and transportation sectors of the future emerging hydrogen economy. Detailed energy efficiency and costing analysis was done to obtain the overall hub cost per MWh of electricity. In a cost effective scenario the hub was found to meet the electrical demand at a cost of 10.23 cents per KWh, while reducing CO_2 emissions by approximately 11.6 million tonnes per year. Sources of hub revenue consisting of utility income from electricity prices in Ontario, hydrogen income from transportation and industry sectors using gasoline and natural gas pricing in Ontario, and possible emissions revenue by off-setting pollution harmful to human health and the environment were considered. In a hydrogen economy scenario 67 million kg of hydrogen was sold to the hydrogen economy per year at $4.82 per kg, while the electrical demand of the hub was met a cost of 11.09 cents per KWh, while reducing CO_2 emissions by 13.5 million tonnes per year. In an emission reduction scenario 14.9 million tonnes of CO_2 emissions where reduced, 193 million kg of hydrogen was sold to the hydrogen economy per year at $4.82 per kg, while the electrical demand of the hub was met a cost of 15.64 cents per KWh. In all scenarios the reduction in CO_2 emission are also associated with the reduction of a number of other air pollutants. A total of 192 simulations were run for different scenarios to perform technology screening using factorial analysis, and their results were discussed in Chapter 4.

From the analysis, it was concluded that the impact of plug-in hybrid vehicles was observed to be minimal at 5% of Ontario vehicles being converted to plug-in hybrids by 2020. This is primarily due to the assumption that plug-in hybrids would consume electricity during periods of low electricity demand, when excess capacity is available. While other environment

pollutant emissions play an important role in overall costs and would result in immediate health benefits to residents of Ontario, costing for CO_2 emissions accounts for roughly 68% of the total emissions costs. Hence, price of CO_2 plays the biggest role in determining total emissions trading benefit.

Furthermore, it was observed that nuclear reactors, followed by biomass reactors, followed by off-shore wind turbines, followed by on-shore wind turbines, and finally followed by solar panels represent the sequence of technology adoption in order to maximize environmental benefits, as this represents both cost and energy effectiveness hierarchy for electricity generation as observed while analyzing hub costs for meeting electricity demand. It was also observed that the clean energy hub for electricity generation is most economical if the nuclear reactor capacity installed is very close to the average yearly electricity demand required by the grid, and then the nuclear reactors are run at full capacity throughout the year, and is augmented with other renewable technologies and fuel cells to meet peak electricity demand. Underground hydrogen storage was the most economical option for all the hubs analyzed.

It can be concluded that fuel cells is not a cost effective option for generating electricity even after considering emissions revenues when cogeneration of hydrogen for industry and transportation, as well as electricity is considered. It is more economical to convert excess power into hydrogen using electrolyzers and sell it to industrial sectors, and transportation sectors. It can also be concluded that most of the hub configurations considered in the analysis become economically viable if electricity prices jump up by 15% to approximately $65 per MWh, gasoline prices go up by 5% from current levels to an average approximately $1.50 per litre over the next 20 years, and the price of CO_2 per ton resorts to around $ 35 – 40 per ton. Therefore, these parameters must be closely watched to determine energy hub profitability.

5.2 Future Recommendations

Simulations for larger 3200 MW nuclear reactor capacity could be performed with the following conditions:

1) Electrolyzers must capable of generating 10000 – 20000 kg / h of hydrogen; and,
2) Nuclear reactor power generation should be synchronized with grid electricity demand, and hydrogen demands for transportation and industry.

These studies will aid in reducing power wastage, increase the availability of hydrogen for hydrogen markets, decrease underutilization or overutilization of electrolyzer capacities.

This model was based on a conceptual design, so clearly more scenarios can be considered. Future work could consider a more detailed objective function to optimize technology sizes for costs of electricity, cost of hydrogen, number of hydrogen vehicles served, amount of industrial hydrogen, amount of emission reduction, or some weighted function of the above. This optimization can be performed using GAMS. As electricity prices, gasoline prices, and / or carbon prices increase, more scenarios will become viable, and the model can be optimized for maximum profit, and / or potential revenue from abating pollutant emissions.

A scenario could be run where the grid connection from the clean energy hub is utilized to its maximum, or a 'Maximum Grid Connection' Scenario. This makes the assumption that there is increased energy demand in the future, and the fixed assets in the Clean Energy Hub (and associated electrical grid connection) can be utilized to their maximum.

Since costs for hydrogen storage in tanks is roughly 3-4 times the cost of hydrogen storage in underground mined caverns further research is needed to confirm geological viability of mined salt caverns around Lake Erie to capitalize on the potential for low-cost underground hydrogen storage as this could significantly enhance the economic viability of low cost renewable hydrogen for various industries

Since there will be large scale production of hydrogen from electrolysis there will also be large scale production of pure oxygen. Therefore, further research on large scale oxygen markets, niche high purity oxygen markets, and inclusion of an oxy-combustion process in the hub would be of great benefit. The impact of plug-in hybrid electric vehicles (PHEVs) could be significant in the off peak hours in the next 20-30 years and could be included in the analysis. Potential for servicing a hydrogen or electric 'GoTrain' in Ontario can be considered.

The elimination of coal is unlikely, so the co-firing of coal and biomass within the energy hub should be considered, including the potential for sequestration of the CO_2. This could include

a more detailed analysis of energy crops in the region, and the potential for accepting Toronto municipal solid waste.

References

Ackermann, T., Anderson, G., & Soder, L. (2001). Distributed Generation: a definition. *Electric Power Systems Research 57:3*, 195-204.

Amos, W. (1998). *Costs of Storing and Transporting Hydrogen.* Golden: National Renewable Energy Laboratory.

Anderson, W. P. (1996). Urban Form, Energy and the Environment: A Review of Issues, Evidence and Policy . *Urban Studies 33:1* , 7-36.

Andrews, C. J. (2006). Formulating and Implementing Public Policy for New Energy Carriers. *IEEE Special Issue on Hydrogen Economy 94:10* , 1852-1863.

APEC Virtual Center. (2007). *Photovoltaic Cell*. Retrieved January 17, 2009, from APEC: Virtual Center for Environmental Technology Exchange: http://www.apec-vc.or.jp/e/modules/tinyd00/content/images/12000/outlne03.jpg

Archer, M. D., & Barber, J. (2004). *Molecular to Global Photosynthesis.* London: Imperial College Press.

Asarizadeh, A. (2007). *Design of Hydrogen Production for Bruce Nuclear Facility.* Waterloo: University of Waterloo.

Ayres, M., MacRae, M., & Stogran, M. (2004). *Levelised Unit Electricity Cost Comparison of Alternate Technologies for Baseload Generation in Ontario.* Calgary: Canadian Energy Research Institute.

Baird, C., & Cann, M. (2005). *Environmental Chemistry: Third Edition.* New York: W. H. Freeman and Company.

Bakken, B., & Holen, A. T. (2004). Energy Service Systems: Integrated planning case studies. *IEEE Power Engineering Society 2* , 2068-2073.

BOC Gases. (1996, June 7). *Nitrous Oxide MSDS*. Retrieved January 29, 2009, from University of Waterloo Centre for Integrated RF Engineering: http://mems.uwaterloo.ca:8080/download/attachments/917527/Nitrous+Oxide.pdf?version=1

Bossel, U. (2006). Does a hydrogen economy make sense? *IEEE Special Issue on Hydrogen Economy 94:10*, 1826-1827.

Bossel, U., & Eliasson, B. (2003). *Energy and The Hydrogen Economy.* Arlington: Methanol Institute

Bruce Power. (2008). *Nanticoke Nuclear Plant Project- Project Description.* Tiverton: Bruce Power.

Bruce Power. (2008). Nanticoke Nuclear Power Plant Project. *Canadian Nuclear Safety Commission.* Bruce Power Erie Inc.

Burda, C., & Peters, R. (2008). *Plugging Ontario Into a Green Future- A Renewable is Doable Action Plan.* Toronto: The Pembina Institute.

Burke, A. (2007). Batteries and Ultracapacitors for Electric, Hybrid, and Fuel Cell Vehicles. *IEEE 95:4* , 806-820.

Canadian Hydrogen Fuel Cell Association. (2008). *About Fuel Cells*. Retrieved December 12, 2008, from Canadian Hydrogen and Fuel Cell Association: http://www.chfca.ca/itoolkit.asp?pg=ABOUT_FUEL_CELLS

CBC News. (2002, June 17). *Ontario's Nanticoke is Canada's Worst Polluter*. Retrieved November 5, 2008, from CBC News: http://www.cbc.ca/health/story/2002/07/17/nanticoke020717.html

City of Toronto. (2007, November 1). *Facts About Toronto's Trash*. Retrieved August 13, 2009, from City of Toronto: http://www.toronto.ca/garbage/facts.htm

Consortium for Energy Efficiency. (2000). *Commercial and Industrial Transformers Initiative.* Boston: Consortium for Energy Efficiency.

Converse, A. (2006). The impact of large-scale energy storage requirements on the choice between electricity and hydrogen as the major energy carrier in a non-fossil renewables-only scenario. *Energy Policy 34:18* , 3374-3376.

Crawford, G., & Benzimra, S. (1986). Advances in Water Electrolysis and their Potential Use in Ammonia and Other Applications. *International Journal of Hydrogen Energy 11:11* , 691-701.

Cumalioglu, I., & Ertas, A. (2008). State of the Art: Hydrogen Storage. *Journal of Fuel Cell Science and Technology 5:3*, 034001.

Cuoco, A., Sgalambro, G., Paolucci, M., & D' Alessio, L. (1995). Is Photovoltaic Hydrogen in Italy Competitive with Traditional Fossil Fuels? *Energy 20:12* , 1303-1309.

Danish Wind Energy Association. (2003, June 8). *Operation and Maintenance Cost of Wind Turbines*. Retrieved April 25, 2009, from Danish Wind Energy Association: www.windpower.org

Danish Wind Energy Association. (2003, June 8). *Wind Energy Guided Tour*. Retrieved April 5, 2008, from Danish Wind Energy Association: http://www.windpower.org/en/tour.htm

Danish Wind Energy Association. (2003, June 8). *Wind Turbine Power Calculator*. Retrieved January 29, 2009, from Danish Wind Energy Association: http://www.windpower.org/en/tour/wres/pow/index.htm

DSS Management Consultants. (2005). *The Illness Cost of Air Pollution: 2005-2025 Health and Economic Damage Estimates.* Ontario Medical Association.

Dunn, S. (2002). Hydrogen Futures: Toward a Sustainable Energy System. *International Journal of Hydrogen Energy 27:3* , 235-264.

Dvorak, M. J., Jacobson, M. Z., & Archer, C. L. (2007). California Offshore Wind Energy Potential . *Windpower 2007 Conference & Exhibition: June 3-6, 2007.* Los Angeles, CA: American Wind Energy Association.

EIA. (2009). *Natural Gas Data*. Retrieved August 11, 2009, from Energy Information Administration: http://www.eia.doe.gov/oil_gas/natural_gas/info_glance/natural_gas.html

EIA. (2009). *Petroleum Data*. Retrieved July 11, 2009, from Energy Information Administration: http://www.eia.doe.gov/oil_gas/petroleum/info_glance/petroleum.html

Elliot, D. (2008). *Projects in Ontario Under Development*. Retrieved January 21, 2009, from AIM POWERGEN: http://www.aimpowergen.com/nanticoke_offshore_wind_farm.html

Energy Information Administration. (2009). *Assumptions to the Annual Energy Outlook 2009.* Energy Information Administration.

Environment Canada. (2003). *Canada Wind Energy Atlas.* Retrieved June 24, 2009, from Environment Canada: http://www.windatlas.ca/en/maps.php

Environment Canada. (2006, September 8). *Clean Air Online: Carbon Monoxide*. Retrieved February 2, 2009, from Environment Canada: http://www.ec.gc.ca/cleanair-

airpur/Pollutants/Criteria_Air_Contaminants_and_Related_Pollutants/Carbon_Monoxide_(CO)-WS139689AB-1_En.htm

EPA. (2005). *EPA Clean Air Interstate Rule*. Retrieved July 25, 2009, from http://www.epa.gov/CAIR/basic.html#so2andnox

European Commission. (2005, January 12). *Thematic Strategies on Air Pollution*. Retrieved June 23, 2009, from Summaries of European Union Legislation: http://europa.eu/legislation_summaries/environment/air_pollution/l28159_en.htm

Foh, S., Novil, M., Rockar, E., & Randolph, P. (1971). *Underground Hydrogen Storage Final Report*. Brookhaven National Laboratories: US Department of Energy. BNL 51275.

Forsberg, C. (2009). Economics of Meeting Peak Electricity Demand Using Hydrogen and Oxygen from Base-Load Nuclear or Off-Peak Electricity. *Nuclear Technology 166:1* , 18-26.

Forsberg, C. (2004). *Nuclear Hydrogen R & D Plan.* US Department of Energy.

Forsberg, C. (2009). Sustainability by Combining Nuclear, Fossil, and Renewable Energy Sources. *Progress in Nuclear Energy 51:1* , 192-200.

FuelCells.org. (2008, July 7). *Fuel Cell Basics: Benefits*. Retrieved July 20, 2009, from FuelCells.org: http://www.fuelcells.org/basics/benefits.html

Garrett, D. (1989). *Chemical Engineering Economics.* New York: Kluwer Academic Publishers.

GasBuddy Inc. (2009). *Canada Gasoline Tax Information*. Retrieved July 18, 2009, from Ontario Gas Prices: http://www.ontariogasprices.com/can_tax_info.aspx

GE- 1.5 MW Wind Turbines Technical Specifications. (2009). Retrieved April 23, 2009, from General Electric Company: http://www.gepower.com/prod_serv/products/wind_turbines/en/15mw/specs.htm

Geidl, M., & Andersson, G. (2007). Optimal Power Flow of Multiple Energy Carriers. *IEEE Transactions on Power Systems 22:1* , 145-155.

Geidl, M., Koeppel, G., Favre-Perrod, P., Klockl, B., Andersson, G., & Frohlich, K. (2007). Energy Hubs for the Future. *IEEE Power and Energy Magazine 5:1* , 24-30.

Government of Ontario. (2008, May 9). *Wind Resource Atlas*. Retrieved January 29, 2009, from Ontario Ministry of Natural Resources: http://lioapp.lrc.gov.on.ca/imf-ows/imf.jsp?site=windpower_en

Hajimiragha, A., Canizares, C., Fowler, M., Geidl, M., & Andersson, G. (2007). Optimal Energy Flow of Integrated Energy Systems with Hydrogen Economy Considerations. *Bulk Power Systems Dynamics and Control* (pp. 1-11). Charleston: IREP.

Haldimand Hydro. (2006, May 1). *Utilities Services for Business: Electricity*. Retrieved January 25, 2009, from Corporation of Haldimand County: http://www.haldimandcounty.on.ca/Business.aspx?id=1134&ekmensel=c580fa7b_134_476_1134_1

Hammerli, M. (1984). When will electrolytic hydrogen become competitive? *International Journal of Hydrogen Energy 9:1-2* , 25-51.

Hansen, J., Sato, M., Ruedy, R., Nazarenko, L., Lacis, A., Schmidt, A., et al. (2005). Efficacy of Climate Forcings. *Journal of Geophysical Research 110:D18104* , 1-45.

Hydrogenics Corp. (2009, February 6). HyStat-Q Outdoor Version Brochure. *HySTAT-60 Hydrogen Generation Systems* . Mississauga, Ontario, Canada: Hydrogenics Corporation.

IEA. (2008). *World Energy Outlook 2008.* Paris: International Energy Agency.

IESO. (2009). *Hourly Ontario Energy Price.* Retrieved February 8, 2009, from Independent Electricity System Operator (IESO): www.ieso.ca

IT Power. (2004, January 13). *Structure of Electrolyzer.* Retrieved January 17, 2009, from www.itpower.co.uk/investire/pdfs/electrolyser.pdf

Ivy, J. (2004). *Summary of Electrolytic Hydrogen Production: Milestone Completion Report.* Golden: National Renewable Energy Laboratory.

Jizhou, Z., Jianqiang, S., & McQuade, D. (2005). *Operational Characteristics and Management of Qinshan Phase III CANDU 6 Nuclear Power Plant.* Atomic Energy Canada Limited.

Kim, B. G., Tredeau, F., & Salameh, Z. (2008). Performance Evaluation of Lithium-Ion Batteries for Use in Electric Vehicles. *IEEE Vehicle Power and Propulsion Conference.* Harbin: IEEE, 1-5.

Knief, R. (1992). *Nuclear Engineering: Theory and Technology of Commercial Nuclear Power.* Washington: Hemisphere Publishing Corporation.

Korpas, M., & Holen, A. (2006). Operation Planning of Hydrogen Storage Connected to Wind Power Operating in a Power Market. *IEEE Transactions on Energy Conversion 21:3* , 742-749.

Kroposki, B., Levine, J., Harrison, K., Sen, P., & Novachek, F. (2006). *Electrolysis: Opportunities for Electric Power Utilities in a Hydrogen Economy.* Golden: National Renewable Energy Laboratory.

Kusterer, J. M. (2009). *NASA Surface Meterology and Solar Energy: Daily Averaged Data*. Retrieved July 10, 2009, from Atmospheric Science Data Center: http://eosweb.larc.nasa.gov/cgi-bin/sse/daily.cgi?email=yaser17@gmail.com

LeRoy, R., & Stuart, A. (1978). Unipolar Water Electrolyzers- A competitive technology. *Proceedings of Second World Hydrogen Energy Conference* (pp. 359-375). Zurich: Pergamon Press.

Lomax, S. (2009, April 22). *U.S. Prices Carbon Dioxide at More Than $13 a Ton in Draft Plan*. Retrieved June 20, 2009, from Bloomberg.com: http://www.bloomberg.com/apps/news?pid=20601130&sid=an3CLLybVe8A

Marban, G., & Valdes-Solis, T. (2007). Towards the Hydrogen Economy? *International Journal of Hydrogen Energy 32:12* , 1625-1637.

McKenney, D., Pelland, S., Poissant, Y., & Morris, R. (2008). Spatial Insolation Models for Photovoltaic Energy in Canada. *Solar Energy 82:11* , 1049-1061.

McSweeney & Associates. (2009). *Service for Business: Haldimand County Community Profile.* Retrieved January 25, 2009, from Corporation of Haldimand County: http://www.haldimandcounty.on.ca/Business.aspx?id=952&ekmensel=c580fa7b_134_466_btnlink

Metz, B., Davidson, O., Coninck, H. d., & Loos, M. (2005). *Carbon Capture and Storage.* Cambridge: IPCC.

Mierlo, J. M. (2007). Fuel cell or battery: Electric cars are the future. *Fuel Cells 7:2* , 165-173.

Miller, A., & Duffey, R. (2006). Integrating Large Scale Co-Generation of Hydrogen and Electricity from Wind and Nuclear Sources. *IEEE EIC Climate Change Technology*. *Article 26*, 1-9.

Naterer, G., Fowler, M., Cotton, J., & Gabriel, K. (2008). Synergistic roles of off-peak electrolysis and thermochemical production of hydrogen from nuclear energy in Canada. *International Journal of Hydrogen Energy 33:23* , 6849-6857.

Naterer, G., Suppiah, S., Lewis, M., Gabriel, K., Dincer, I., Rosen, M., et al. (2009). Recent Canadian advances in nuclear-based hydrogen production and the thermochemical Cu-Cl cycle. *International Journal of Hydrogen Energy 34:7* , 2901-2917.

National Fuel Cell Research Center. (2007). *Markets and Applications*. Retrieved February 2, 2009, from California Stationary Fuel Cell Collaborative: http://www.casfcc.org/2/StationaryFuelCells/MarketsAndApplications.aspx

National Research Council Canada. (2008, January 14). *Sunrise/Sunset Calculator Services - NRC - CNRC*. Retrieved March 4, 2009, from National Research Council Canada: http://www.nrc-cnrc.gc.ca/eng/services/hia/sunrise-sunset.html

Natural Gas.org. (2004). *Storage of Natural Gas*. Retrieved August 12, 2009, from Natural Gas.org: http://www.naturalgas.org/naturalgas/storage.asp

Natural Resources Canada. (2009, March 25). *Fuel Consumption Guide*. Retrieved July 23, 2009, from Natural Resources Canada: http://oee.nrcan.gc.ca/transportation/tools/fuel-consumption-guide/fuel-consumption-guide-results.cfm?year=2009&type=CPL&Mfg=CHEV

Natural Resources Canada. (2007). *Moving Forward on Energy Efficiency in Canada: A Foundation for Action*. Retrieved October 20, 2008, from Natural Resources Canada: http://www.nrcan-rncan.gc.ca/com/resoress/publications/cemcme/transport-eng.php#note33.

Natural Resources Canada. (2009, April 27). *RETScreen International: 1000 MW / Germany*. Retrieved June 4, 2009, from Natural Resources Canada: http://www.retscreen.net/ang/case_studies_1000kw_germany.php

NaturalGas.org. (2004). *Natural Gas and the Environment*. Retrieved June 23, 2009, from NaturalGas.org: http://www.naturalgas.org/environment/naturalgas.asp#emission

Navigent Consulting. (2006). *A Review of PV Inverter Technology Costs and Performance Projections.* Golden: National Renewable Energy Laboratory.

Newborough, M. (2004, February). *A Report on Electrolyzers, Future Markets And The Prospects For ITM POWER LTD's Electrolyzer Technology.* Retrieved March 15, 2009, from Hydrogen and Fuel Cell Investor: http://www.h2fc.com/Newsletter/PDF/ElectrolyserTechnologyReportFINAL.doc

NHA. (2009). *The Energy Evolution: An Analysis of Alternative Vehicles and Fuels to 2100.* Washington: National Hydrogen Association.

Nichols, B. (2009, July 15). *A Plan for Ontario: 1 in 20 by 2020*. Retrieved July 23, 2009, from Queen's Printer for Ontario: http://news.ontario.ca/mto/en/2009/07/a-plan-for-ontario-1-in-20-by-2020.html

NYSERDA. (2005). *Hydrogen Production: Steam Methane Reforming.* New York: New York State Energy Research and Development Authority.

Ohara, S. (2007). Analysis of Fuel Cell Micro-Grid with Small Scale Wind Turbine Generator. *International journal of Hydrogen Energy 32:3* , 323-336.

Ontario Ministry of Energy. (2006). *An Assessment of the Viability of Exploiting Bio-Energy Resources Accessible to the Atikokan Generating Station in Northwestern Ontario* . Marie: SENES Consultation Limited.

Ontario Ministry of Energy and Infrastructure. (2008, December 9). *Nuclear Energy*. Retrieved January 29, 2009, from Ontario Ministry of Energy and Infrastructure:

http://www.mei.gov.on.ca/english/energy/electricity/index.cfm?page=nuclear-electricity-supply

Ontario Ministry of Natural Resources. (2004). *Provincial Wood Supply Stratergy.* Toronto: Queen's Printer for Ontario.

Ontario Power Authority. (2007). *Planning Ontario's Electricity System*. Retrieved July 23, 2008, from Ontario Power Authority: http://www.powerauthority.on.ca/electron/Page.asp?PageID=1290&ContentID=666&SiteNodeID=141&BL_ExpandID=246

Ontario Power Generation. (2009). *Nanticoke Generating Starion*. Retrieved August 13, 2009, from Ontario Power Generation: http://www.opg.com/power/fossil/nanticoke.asp

Ontario's Ministry of Natural Resources. (2009, April 1). *List of Forest Resource Processing Facilities (Mills) in Ontario*. Retrieved August 13, 2009, from Ontario Ministry of Natural Resources Web site: http://www.mnr.gov.on.ca/en/Business/Forests/1ColumnSubPage/STEL02_167708.html#table1

OY Not LLC. (2009). *Solar Panel Price List*. Retrieved May 25, 2009, from OY Not LLC: http://www.oynot.com/solar-panel-price-list.html

Parsons, J., & Yangbo, D. (2009). *Update on Cost of Nuclear Power.* Cambridge: Centre for Energy and Environmental Policy Research. MIT Energy Initiative.

Peters, M., Timmerhaus, K., & West, R. (2004). *Plant Design and Economics for Chemical Engineers.* New York: McGraw-Hill.

Pidwirny, M. (2007, February 11). *Daily and Annual Cycles of Temperature.* Retrieved March 15, 2009, from Encyclopedia of Earth:

http://www.eoearth.org/article/Daily_and_annual_cycles_of_temperature#Daily_Cycles_of_Air_Temperature

Ramsden, T. (2008, September 23). *DOE Hydrogen Program: DOE H2A Analysis Production Case Studies.* Retrieved June 24, 2009, from US Department of Energy: http://www.hydrogen.energy.gov/h2a_prod_studies.html

Shafeen, A., Croiset, E., Douglas, P. L., & Chatzis, I. (2004). CO_2 sequestration in Ontario, Canada. Part I: storage evaluation of potential reservoirs. *Energy Conversion and Management 45:17* , 2645-2659.

Sharif, S., Barbir, F., & Veziroglu, T. (2005). Wind Energy and Hydrogen Technology- A Review of the Technology. *Solar Energy 78:5* , 647-660.

Shakya, B., & Musgrave, P. (2005). Technical Feasibility and Financial Analysis of Hybrid Wind-Photovoltaic System with Hydrogen Storage for Cooma. *International Journal of Hydrogen Energy 30:1* , 9-20.

Statistics Canada. (2008, 12 19). *Population and Dwelling Counts: 2006 Census*. Retrieved July 23, 2009, from Statistics Canada: http://www12.statcan.gc.ca/census-recensement/2006/dp-pd/hlt/97-550/Index.cfm?TPL=P1C&Page=RETR&LANG=Eng&T=101

Suntech Power. (2009). STP-DS-STD-N01.02 Rev 2009. *Suntech STP-210 18Ub Brochure* . Suntech Power Inc.

Taljan, G., Fowler, M., Canizares, C., & Verbic, G. (2008). Hydrogen storage for mixed wind-nuclear power plants in the context of a Hydrogen Economy. *International Journal for Hydrogen Energy 33:17* , 4463-4475.

Taylor, J., Alderson, J. A., Kalyanam, K., Lyle, A., & Phillips, L. (1986). A Technical and Economic Assessment of Methods for the Storage of Large Quantities of Hydrogen. *International Journal of Hydrogen Energy 11:1.* , 5-22.

Timmerhaus, C., & Flynn, T. (1989). Cryogenic Engineering. *New York: Plenum Press* .

TransCanada Pipelines. (1996, July 17). *A Pipeline Construction Gives Saskatchewan Economy a Boost.* Retrieved August 13, 2009 from US Department of Energy http://www1.eere.energy.gov/hydrogenandfuelcells/pdfs/25106.pdf

Transport Canada. (2008). *Transportation in Canada.* Ottawa: Transport Canada.

United Nations Environment Program. (2002). *Energy Technology: Photovoltaic Fact Sheet.*

US DOE. (2008, December 19). *HFCIT Hydrogen Storage: Metal Hydrides*. Retrieved March 5, 2009, from US Department of Energy: http://www1.eere.energy.gov/hydrogenandfuelcells/storage/metal_hydrides.html

US DOE. (2007). *Multi-Year Research, Development, and Demonstration Plan: Planned Program Activities from 2005 - 2015- Technical Plan - Fuel Cells.* US Department of Energy Fuel Cell Technologies Program.

US DOE. (2009). *Transportation Energy Data Book.* 28th Edition. Oak Ridge: Oak Ridge National Laboratory.

US National Research Council . (2004). *The hydrogen economy: opportunities, costs, barriers, and R & D needs.* Washington: National Research Council and National Academy of Engineering.

Venter, R. D., & Pucher, G. (1997). Modelling of Stationary Bulk Hydrogen Systems. *International Journal of Hydrogen Energy 22:8* , 791-798.

Vestas Wind Systems A/S. (2009, May 23). Vestas V80 2.0 MW Brochure. Denmark: Vestas Wind Systems A/S.

Ward, C. A., Stanga, D., Pataki, L., & Venter, R. D. (1993). Design for the cold start-up of a man-portable fuel cell and hydrogen storage system. *Journal of Power Sources 41:3* , 335-352.

Winter, C. (2005). Into the Hydrogen Economy Milestones. *International Journal of Hydrogen Energy 30:7* , 681-685.

WISE Uranium Project. (2009, March 20). *Uranium Fuel Cost Calculator*. Retrieved March 23, 2009, from WISE Uranium Project: http://www.wise-uranium.org/nfcc.html

Wood, S., & Layzell, D. (2003). *A Canadian Biomass Inventory: Feedstocks for a Bio-based Economy.* BIOCAP Canada Foundation.

World Nuclear Association. (2008, November). Economics of Nuclear Power.

Zandt, D. V. (2006). *Ontario Wind Integration Study.* Toronto: GE Energy for Ontario Power Authority.

Zittel, W., & Wurster, R. (1996). Hydrogen in the Energy Sector. *L-B-Systemtechnik.* Munich.

Appendices

Appendix A: Simulink Model

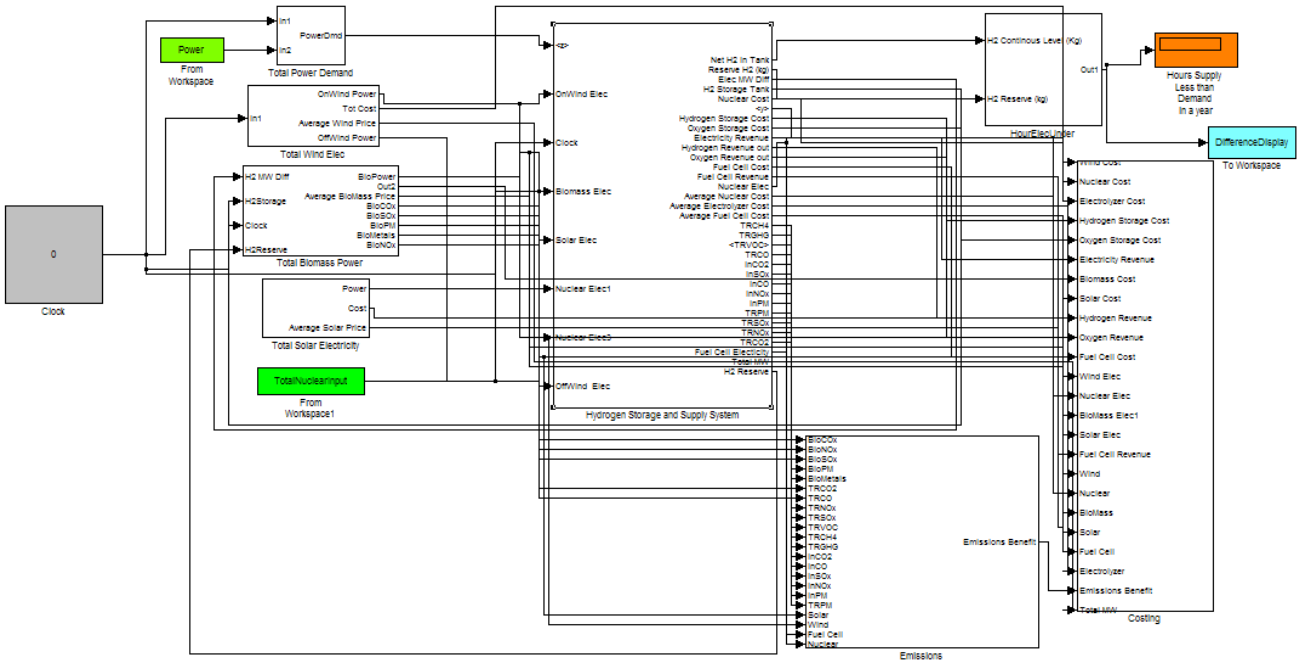

Figure 87: Overall Simulink Model

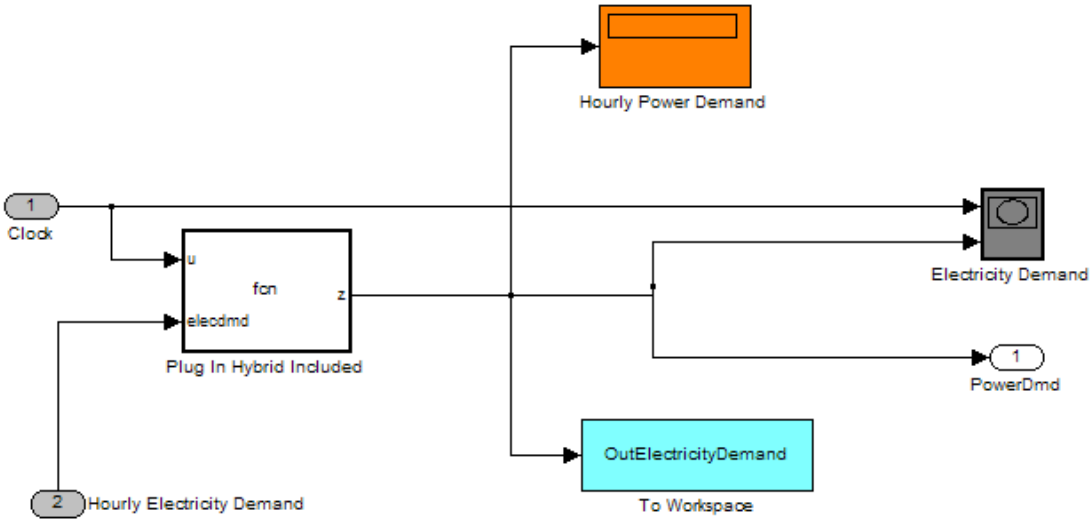

Figure 88: Power Demand Subsystem

Plug-in Hybrid Function Code:

```
function z  = fcn(u,elecdmd)

% This block increases the electricity demand by 84 MW from 10 pm to 6 am
```

```
% due to plug-in hybrid electricity demand

timeday = (u/24)- floor (u/24);  % determines hour of the day divided by 24

if timeday <= 0.27083
    a = elecdmd + 84;
elseif timeday > 0.89583;
    a = elecdmd + 84;
else
    a = elecdmd;
end;

    z = a;
```

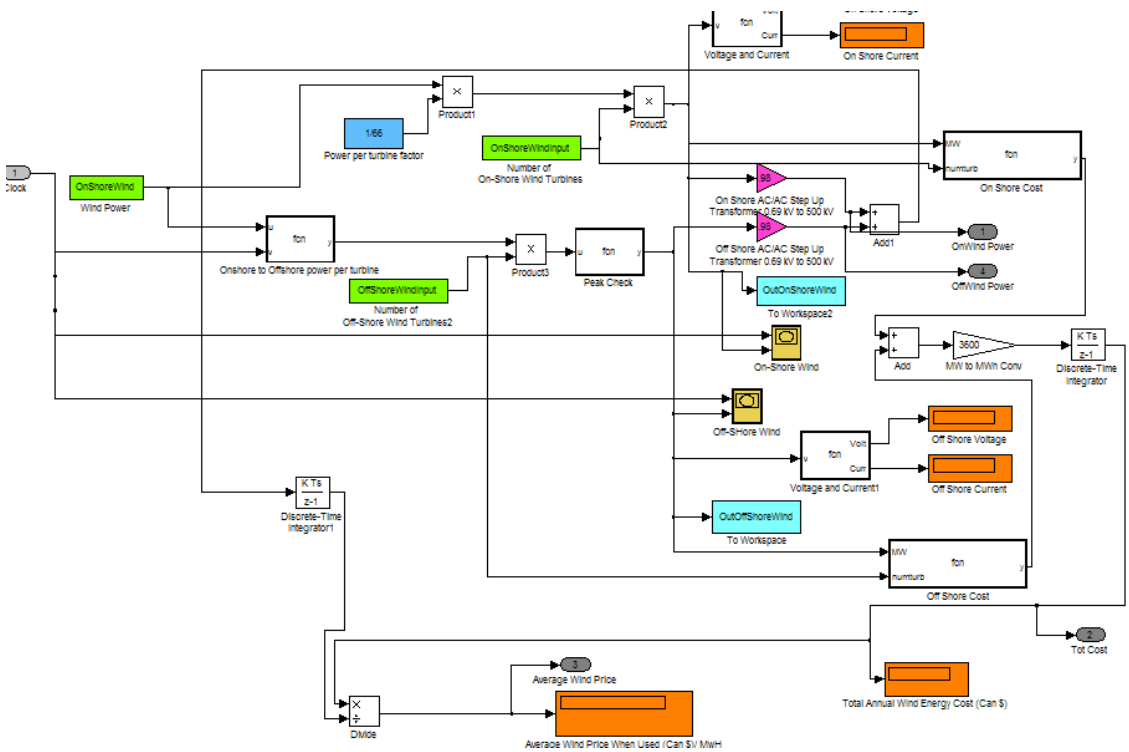

Figure 89: Wind Power Subsystem

On-Shore to Off-Shore Wind Profile Conversion Function:

```
function y = fcn(u,v)
% This block determines the off-shore wind turbine profile based on season
and adjustment factor
if v < 1416                     % Hour
    y = u/66*1.217446;          % Data obtained was for 66 on-shore turbines
elseif v >= 1416 && v < 3624
    y = u/66*1.242378;
elseif v >= 3624 && v < 5832
    y = u/66*1.249064;
elseif v >= 5832 && v < 8016
    y = u/66*1.23589;
else
```

```
    y = u/66*1.217446;
end;
```

Off-Shore Power Peak Check Function:

```
function y = fcn(u)
% This block ensures the resultant off-shore wind power
% does not exceed peak off-shore turbine capacity

if u > 300    % Given 150 2 MW turbines are considered
   y = 300;
else
    y = u;
end;
```

On-Shore Annual Cost Function:

```
function y = fcn(MW,numturb)
% This block determines the total annual cost of On-Shore wind Turbines

% According to http://www.windpower.org/en/tour/econ/oandm.htm
% Capital Cost will be depreciated over 20 years
% Interest rate assumed to be 5%
% Hourly fixed cost
% Based on http://www.windpower.org/en/tour/econ/oandm.htm, operating
% and maintenance cost = 0.01 USD / kwh
% Based on http://www.windpower.org/en/tour/econ/econ.htm
% On-Shore wind costs $2750000US / Installed MW capacity
% Assuming 1.5 MW capacity for onshore turbines
% 1 Can $ = 0.9 US $

OMcost = 0.01*1/0.9*1000/3600*MW;       %Cost in Can$ / amt MW used

%DepCost of all turbines
FixedCost = 1.5*2750000*numturb*1/0.9*1.05^(20*.46)/(20*3600*365*24);

y = OMcost + FixedCost;
```

Off-Shore Annual Cost Function:

```
function y = fcn(MW,numturb)
%This block determines the annual cost of off-shore wind turbines

% According to http://www.windpower.org/en/tour/econ/oandm.htm
% Capital Cost will be depreciated over 20 years
% Interest rate assumed to be 5%
% Hourly fixed cost
% Based on http://www.windpower.org/en/tour/econ/oandm.htm, operating
% and maintenance cost = 0.01 USD / kwh
% Based on http://www.windpower.org/en/tour/econ/econ.htm
% On-Shore wind costs $17460000 DKK / Installed 1.5 MW capacity
% This is approx $3266000 US / Installed 1.5 MW capacity
% Assuming 1.5 MW capacity for onshore turbines
```

```
% According to http://www.berr.gov.uk/files/file17774.pdf, there are
% no other additional operating costs for offshore turbines

OMcost = 0.01*1/0.9*1000/3600*MW;        %Cost in Can$ / amt MW used

FixedCost = (2/1.5)*3266000*numturb*1/0.9*1.05^(20*.46)/(20*3600*365*24);
%DepCost of all turbines

y = OMcost + FixedCost;
```

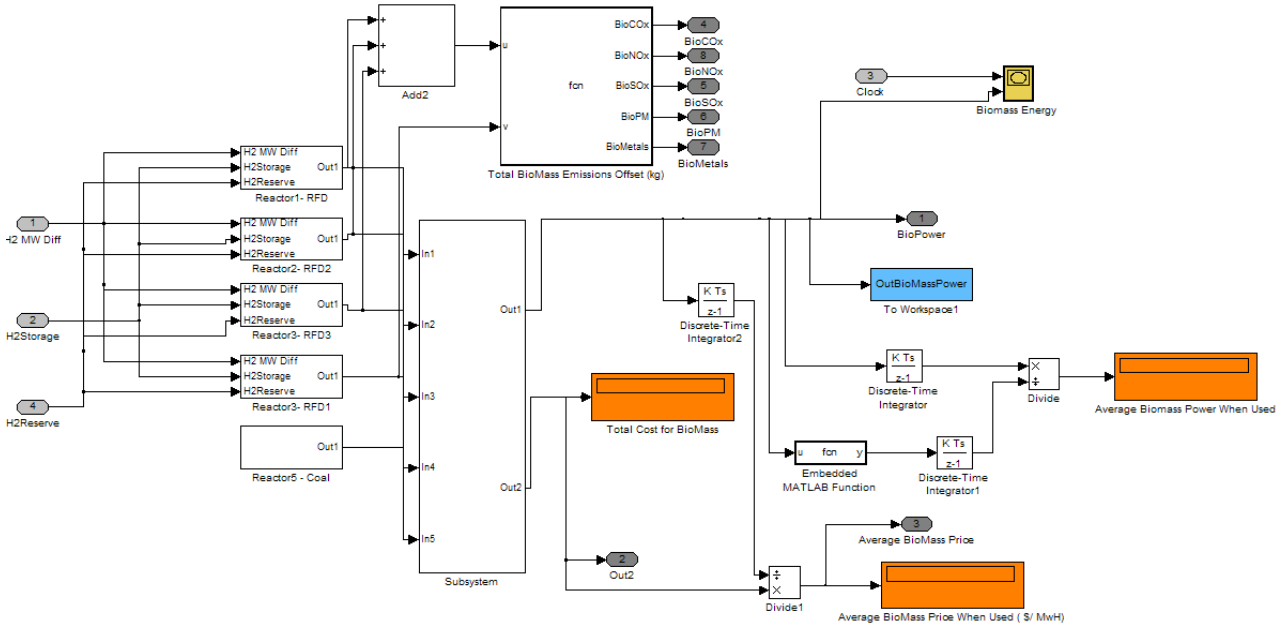

Figure 90: Overall Biomass Subsystem

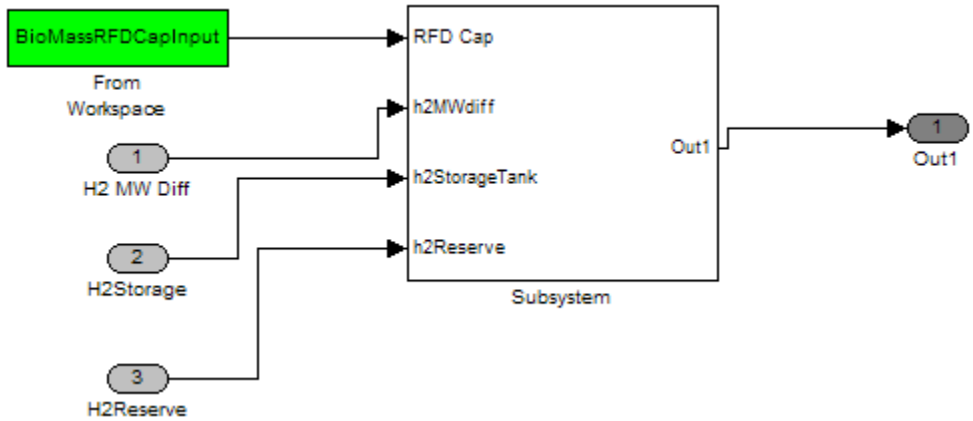

Figure 91: Sample RFD / Wood Chip Subsystem

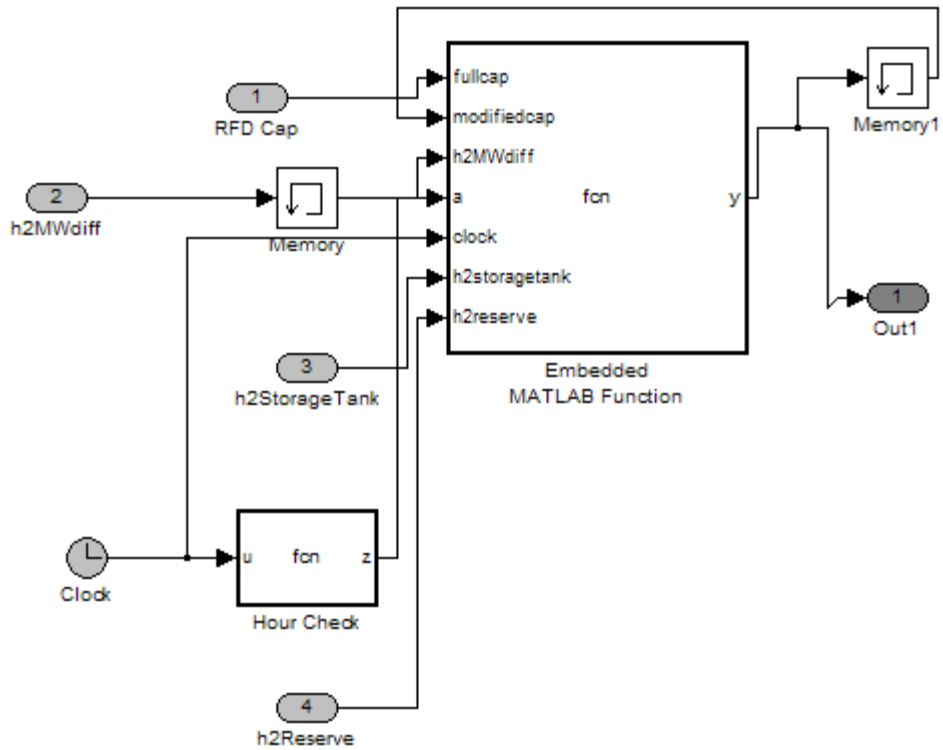

Figure 92: Sample RFD/Wood Chip Power Output Subsystem

Hour Check Function to Determine if Biomass Power Output Needs to be Reviewed:

```
function z  = fcn(u)
% This block determines when the biomass function needs to be applied
% Net power from biomass is reviewed every 6 hours at 10 am, 4 pm, 10 pm,
% and 4 am.

timeday = (u/24)- floor (u/24);

if (timeday >= 0.14583) && (timeday <=.01875)
    a = 1;
elseif (timeday > 0.39583) && (timeday <=.4375)
    a = 1;
elseif (timeday > 0.64583) && (timeday <=.6875)
    a = 1;
elseif (timeday > 0.89583) && (timeday <=.9375)
    a = 1;
else
    a = 0;
end;

    z = a;
```

Biomass Power Output Function:

```
function y =
fcn(fullcap,modifiedcap,h2MWdiff,a,clock,h2storagetank,h2reserve)

%This block determines the power output from Refuse Derived Fuel and wood
chips
%Fullcap:     the maximum capacity of reactor (MW)
%Modifiedcap: the current power output from reactor (MW)
%h2MWdiff:    Power supply - power demand over last 2 hours (MW)
%a:           determines if biomass power needs to be reviewed
%clock:       hour of the year
%h2storagetank: Amount of hydrogen in storage (kg)
%h2reserve:     Amount of reserve hydrogen (kg)

if a == 1;                                  % Confirms biomass power
                                            % needs to be reviewed

if h2storagetank-h2reserve > 800000         % kg
    biomassoutput = 0;
elseif h2storagetank-h2reserve > 500000
    biomassoutput = 0.5*fullcap;
elseif h2storagetank-h2reserve < 125000
    biomassoutput = fullcap;

% Ramping Down
% If ramping down, to ramp down faster factor must be greater than 1
elseif h2MWdiff > 1000
    biomassoutput = 0.6*fullcap;
elseif h2MWdiff > 600 && h2MWdiff <= 1000  % ramp down btw 75% and 100% cap
    if modifiedcap == 1*fullcap
        biomassoutput = (1-((h2MWdiff)/(1000)*.25*1.4))*fullcap;

        if biomassoutput > fullcap
            biomassoutput = fullcap;
        elseif biomassoutput < 0.6*fullcap;
            biomassoutput = 0.6*fullcap;
        end

    elseif modifiedcap < 1*fullcap && modifiedcap > 0.75*fullcap
        biomassoutput = (1-((h2MWdiff)/(1000)*.4*1.4))*fullcap;
                                              % ramp down btw 60% and 75% cap
        if biomassoutput > fullcap
            biomassoutput = fullcap;
        elseif biomassoutput < 0.6*fullcap;
            biomassoutput = 0.6*fullcap;
        end

    else
        biomassoutput = 0.6*fullcap;
    end

elseif h2MWdiff >= 0 && h2MWdiff <= 600
    if modifiedcap == 1*fullcap
        biomassoutput = (1-((h2MWdiff)/(600-0)*.25*1.4))*fullcap;
```

```
                                        % ramp down btw 75% and 100% cap
        if biomassoutput > fullcap
            biomassoutput = fullcap;
        elseif biomassoutput < 0.6*fullcap;
            biomassoutput = 0.6*fullcap;
        end

    elseif modifiedcap < 1*fullcap && modifiedcap > 0.75*fullcap
        biomassoutput = (1-((h2MWdiff)/(600-0)*.4*1.4))*fullcap;
                                        % ramp down btw 60% and 75% cap
        if biomassoutput > fullcap
            biomassoutput = fullcap;
        elseif biomassoutput < 0.6*fullcap;
            biomassoutput = 0.6*fullcap;
        end

    else
        biomassoutput = 0.6*fullcap;
    end

% Ramping UP
% if ramping up, to ramp up faster the factor must be less than 1
elseif h2MWdiff < -1000
    biomassoutput = 1*fullcap;

elseif h2MWdiff >= -1000 && h2MWdiff <= -600
    if modifiedcap == .6*fullcap
        biomassoutput = (1-((1000+h2MWdiff)/(1000-600)*.4*0.8))*fullcap;
                                        % ramp up btw 60% and 75% cap
        if biomassoutput > fullcap
            biomassoutput = fullcap;
        elseif biomassoutput < 0.6*fullcap;
            biomassoutput = 0.6*fullcap;
        end

    elseif modifiedcap > .6*fullcap && modifiedcap < 0.75*fullcap
        biomassoutput = (1-((1000+h2MWdiff)/(1000-600)*.25*0.8))*fullcap;
                                         % ramp up btw 75% and 100% cap
        if biomassoutput > fullcap
            biomassoutput = fullcap;
        elseif biomassoutput < 0.6*fullcap;
            biomassoutput = 0.6*fullcap;
        end

    else
        biomassoutput = 1*fullcap;
    end

elseif h2MWdiff > -600 && h2MWdiff < 0

    if modifiedcap == .6*fullcap
        biomassoutput = (1-((600+h2MWdiff)/(600-0)*.4*0.8))*fullcap;
                                         % ramp up btw 60% and 75% cap
        if biomassoutput > fullcap
            biomassoutput = fullcap;
```

```
        elseif biomassoutput < 0.6*fullcap;
            biomassoutput = 0.6*fullcap;
        end

    elseif modifiedcap > .6*fullcap && modifiedcap < 0.75*fullcap
        biomassoutput = (1-((600+h2MWdiff)/(600-0)*.25*0.8))*fullcap;
                                                % ramp up btw 75% and 100% cap
        if biomassoutput > fullcap
            biomassoutput = fullcap;
        elseif biomassoutput < 0.6*fullcap;
            biomassoutput = 0.6*fullcap;
        end

    else
        biomassoutput = 1*fullcap;
    end
else
    biomassoutput = 1*fullcap;

end

elseif a == 0 && clock <= 6                 % reactor at full cap for first
    biomassoutput = fullcap;                % 6 hours in year
elseif a == 0
    biomassoutput = modifiedcap;
else
    biomassoutput = fullcap;
end

y = biomassoutput;
```

Coal Power Output Function:

```
function y = fcn(fullcap,clock)
%This block determines when coal is run

if clock > 3400 && clock <= 5400 % only run during peak season at full
                                   capacity
coaloutput = fullcap;
else
    coaloutput = 0;
end

y = coaloutput;
```

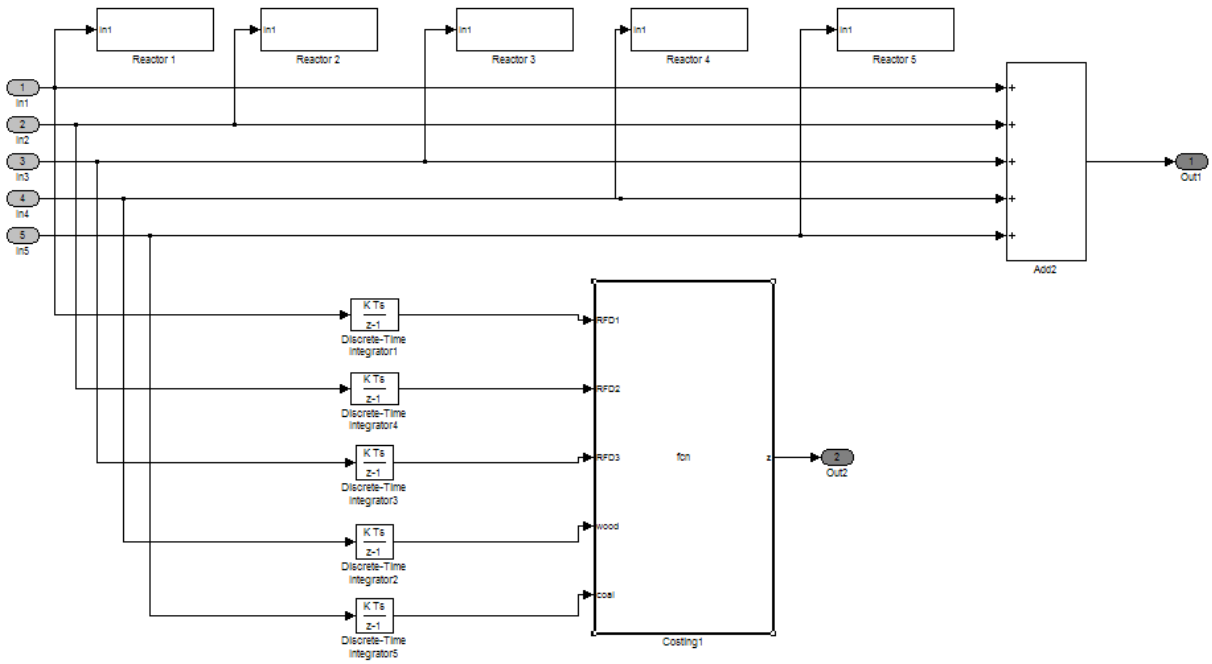

Figure 93: Biomass Costing Subsystem

Biomass Cost Function:

```
function z = fcn(RFD1,RFD2,RFD3,wood,coal)

% This function determines the cost of power from biomass and coal
% Source: An Assessment of Viability of Exploiting Bio-Energy Resources
Accessible
% to the Atikokan Generating Station in Northwestern Ontario
% RFD Levelized Cost is $140/MWh
% Wood Levelized Cost is $115/MWh
% Coal Levelized Cost is $47.72/MWh

z = RFD1*140 + RFD2*140 + RFD3*140 + wood*115 + coal*47.72 ;
```

Biomass Emissions Function:

```
function [BioCOx, BioNOx, BioSOx, BioPM, BioMetals]= fcn(RFD,wood)
%Based on Data from FBi report on Atikokan Plant. The data can be found in
the Wood Pellet file.

CoalCOx = 1100;             % kg / MW
CoalNOx = 3.29;             % kg / MW
CoalSOx = 6;                % kg / MW
CoalPM = 0.041;             % kg / MW
CoalMetals = 0.000004;      % kg / MW

% Power output from RFD and Wood Pellets Reactors are used to determine
% the amount of emissions released in kilograms / hour
BioCOx = ((CoalCOx - 1100)* RFD) + ((CoalCOx - 1130) * wood);
BioNOx = ((CoalNOx - 0.68) * RFD) + ((CoalNOx - 0.33) *wood) ;
BioSOx = ((CoalSOx - 0.322) * RFD) + ((CoalSOx - 0.022)*wood);
```

```
BioPM = ((CoalPM - 1.72) * RFD) + ((CoalPM - 0.089) * wood);
BioMetals = ((CoalMetals - 0.00049) * RFD) + ((CoalMetals - 0.00004) *
wood);
```

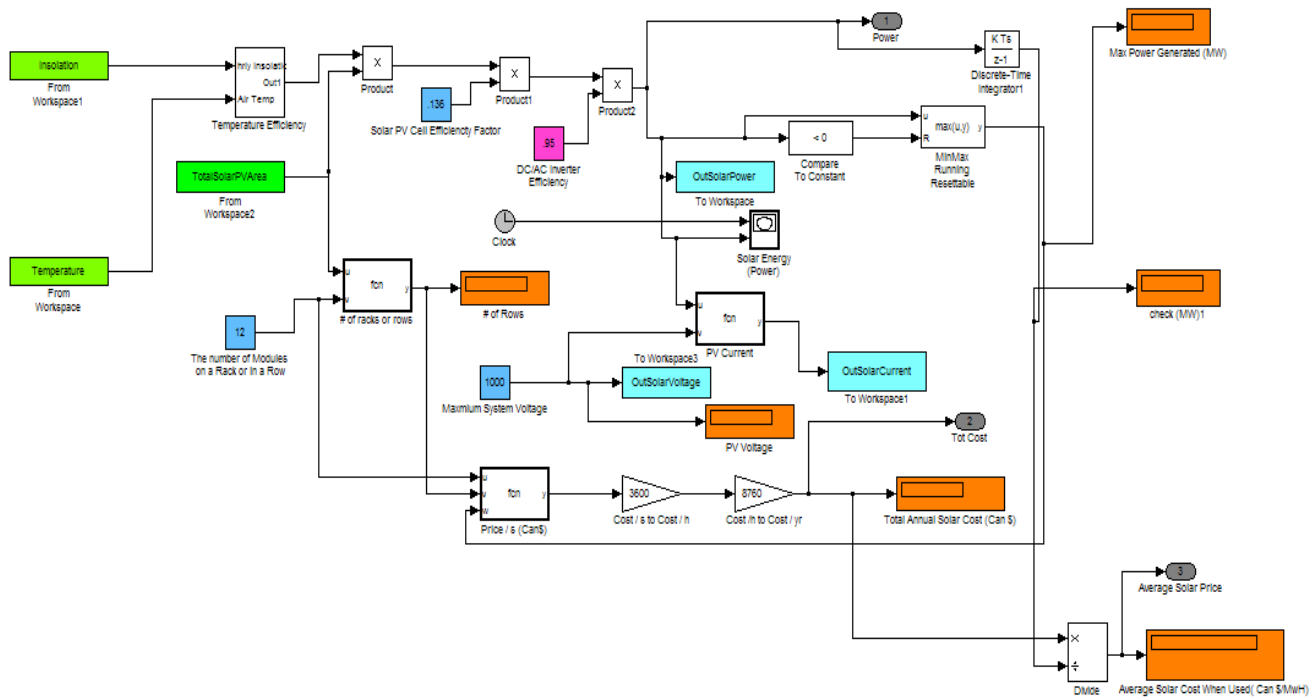

Figure 94: Solar Subsystem

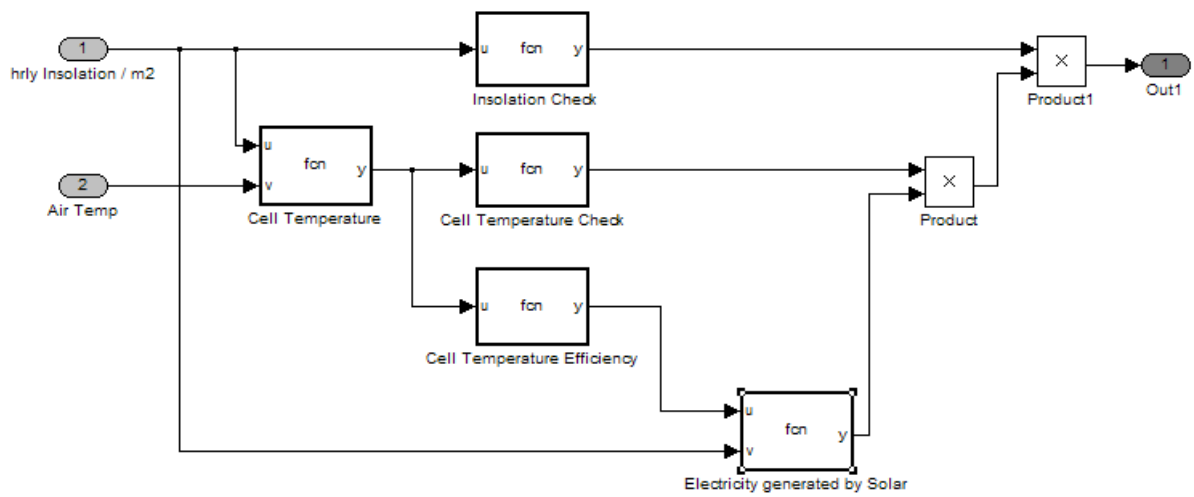

Figure 95: Solar Cell Temperature Efficiency Loss Subsystem

Solar PV Cell Temperature Function:

```
function y = fcn(insolation, airtemp)

% This function calculates the cell operating temperature
% NOCT = 45 C
```

```
% y = 25;
% 80 mW/cm2 * 10000 cm2/m2 * 10^-9 MW/mW = MW/m2
% hence multiply u by 10^6

y = (45-20)/80*(insolation*100000)+airtemp;
```

Solar Cell Temperature Range Check Function:

```
function y = fcn(u)

% This function determines if it is the operating temperature.

a = 0;

% The highest operating temperature is 85 C and the lowest is -40 C

if u >= -40 && u <= 85
               a = 1;
else
                a = 0;
    end;
y = a;
```

Solar PV Minimum Insolation Check Function:

```
function y = fcn(u)

% This function determines if it is the minimum insolation required.

a = 0;

% The minimum insolation required is 0.0001 MW/m^2

if u >= 0.0001
               a = 1;
else
                a = 0;
    end;

y = a;
```

Solar PV Cell Temperature Efficiency Loss Function:

```
function y = fcn(u)

% This function calculates the operating temperature efficiency
% The peak power temperature coefficient is -0.48 %/C
% The NOCT is 45 C

y = 1;


% This is the equation for operating temperatures below 45 C
```

```
if (u <= 45)
    a = 1-(0.48*(45-u)/100);

% This is the equation for operating temperatures above 45 C

    else
    a = 1-(0.48*(u-45)/100);

       end;
y = a;
```

Solar PV Cells Costing Function:

```
function y = fcn(u, v, w)

% u = # of modules
% v = # of racks
% w = solar power output (MW/h)
% This function determines the installed capital and operating cost for
solar panels
% The dimensions of solar panel is 1482mm*992mm
% According to http://www.oynot.com/solar-info.html
% Suntech solar panels chosen for this model is $708 US / module
% Given the quantity required, it is assumed transportation costs will be
covered by discounts
% On talking to Suntech, we were informed that installation would be free of
charge
% According to
http://www.uneptie.org/energy/information/publications/factsheets/pdf/pv.PDF
% If land and installation costs are ignored, PV module makes up for 75% of
the cost, and
% other components make up for 25% of the cost
% Assumed financing interest rate 5%
% According to Suntech: Life span is 25 yrs

totmodules = u*v;

TICC = totmodules*708*1/0.9*(1/0.75);                  % Can $
fixedcost = TICC*1.05^(25*.46)/(25*365*24*3600);       % Can $ / s

% Based on http://www.retscreen.net/ang/case_studies_1000kw_germany.php the
% operating and maintenance cost for solar panels is 15300 euros / yr based
on a peak capacity of 925 kW

OMcost = ((15300/0.925)*w*(1.58/1))/(365*24*3600);
% Operating cost in Can $ /s

% Based on Navigent consulting inverter cost PPT inverters cost $ 0.7 per
watt and have a lifetime of 5 years
invcost = 0.7*1000*1000*w;
invcostpersec = invcost*1.05^(5*.46)/(5*365*24*3600);  % Can $ / s

y = fixedcost + OMcost + invcostpersec;
```

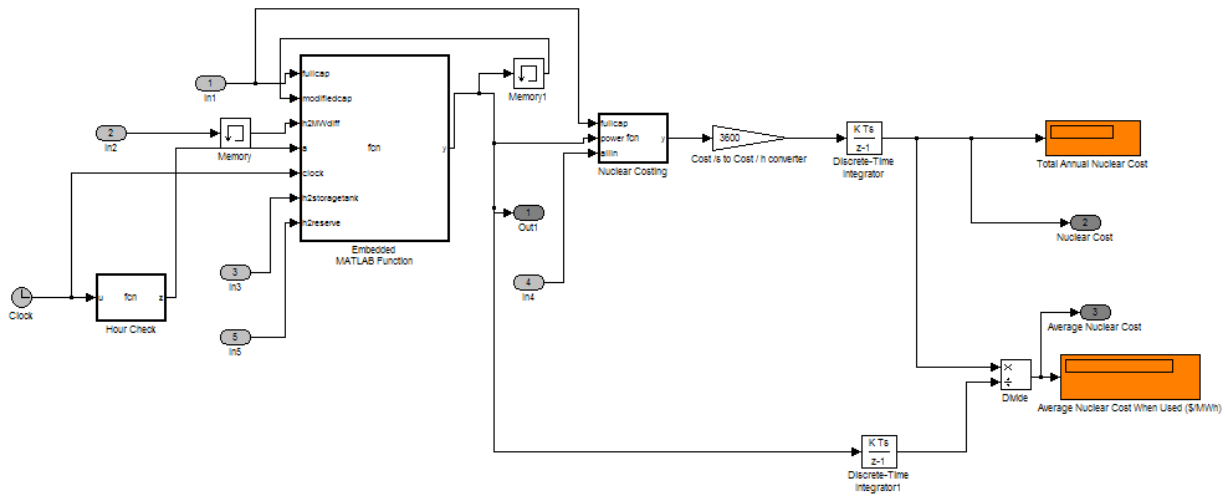

Figure 96: Overall Nuclear Subsystem

Nuclear Power Output Function:

```
function y =
fcn(fullcap,modifiedcap,h2MWdiff,a,clock,h2storagetank,h2reserve)
% This function determines the net power output from nuclear reactors
% the logic for this function is identical to the logic shown previously
% for biomass reactor power output. Hence, detailed explanations of factors
% are not included here.

if a == 1;
if h2storagetank-h2reserve > 500000
    nuclearoutput = 0.6*fullcap;
elseif h2storagetank-h2reserve < 175000
    nuclearoutput = fullcap;

% Ramping Down
% If ramping down, to ramp down faster factor must be greater than 1
elseif h2MWdiff > 2000
    nuclearoutput = 0.6*fullcap;
elseif h2MWdiff > 1000 && h2MWdiff <= 2000
    if modifiedcap == 1*fullcap
        nuclearoutput = ((1-((h2MWdiff)/2000)*.25*1.5))*fullcap;

        if nuclearoutput > fullcap
            nuclearoutput = fullcap;
        elseif nuclearoutput < 0.6*fullcap;
            nuclearoutput = 0.6*fullcap;
        end

    elseif modifiedcap < 1*fullcap && modifiedcap > 0.75*fullcap
        nuclearoutput = (1-((h2MWdiff)/(1000)*.4*1.5))*fullcap;

        if nuclearoutput > fullcap
            nuclearoutput = fullcap;
        elseif nuclearoutput < 0.6*fullcap;
            nuclearoutput = 0.6*fullcap;
```

```
        end

    else
        nuclearoutput = 0.6*fullcap;
    end

elseif h2MWdiff >= 0 && h2MWdiff <= 1000
    if modifiedcap == 1*fullcap
        nuclearoutput = (1-((h2MWdiff)/(1000-0)*.25*1.5))*fullcap;

        if nuclearoutput > fullcap
            nuclearoutput = fullcap;
        elseif nuclearoutput < 0.6*fullcap;
            nuclearoutput = 0.6*fullcap;
        end

    elseif modifiedcap < 1*fullcap && modifiedcap > 0.75*fullcap
        nuclearoutput = (1-((h2MWdiff)/(1000-0)*.4*1.5))*fullcap;

        if nuclearoutput > fullcap
            nuclearoutput = fullcap;
        elseif nuclearoutput < 0.6*fullcap;
            nuclearoutput = 0.6*fullcap;
        end

    else
        nuclearoutput = 0.6*fullcap;
    end

% Ramping UP
% if ramping up, to ramp up faster the factor must be less than 1
elseif h2MWdiff < -1000
    nuclearoutput = 1*fullcap;

elseif h2MWdiff >= -1000 && h2MWdiff <= -600
    if modifiedcap == .6*fullcap
        nuclearoutput = (1-((1000+h2MWdiff)/(1000-600)*.4*0.8))*fullcap;

        if nuclearoutput > fullcap
            nuclearoutput = fullcap;
        elseif nuclearoutput < 0.6*fullcap;
            nuclearoutput = 0.6*fullcap;
        end

    elseif modifiedcap > .6*fullcap && modifiedcap < 0.75*fullcap
        nuclearoutput = (1-((1000+h2MWdiff)/(1000-600)*.25*0.8))*fullcap;

        if nuclearoutput > fullcap
            nuclearoutput = fullcap;
        elseif nuclearoutput < 0.6*fullcap;
            nuclearoutput = 0.6*fullcap;
        end

    else
```

```
        nuclearoutput = 1*fullcap;
    end

elseif h2MWdiff > -600 && h2MWdiff < 0

    if modifiedcap == .6*fullcap
        nuclearoutput = (1-((600+h2MWdiff)/(600-0)*.4*0.8))*fullcap;

        if nuclearoutput > fullcap
            nuclearoutput = fullcap;
        elseif nuclearoutput < 0.6*fullcap;
            nuclearoutput = 0.6*fullcap;
        end

    elseif modifiedcap > .6*fullcap && modifiedcap < 0.75*fullcap
        nuclearoutput = (1-((600+h2MWdiff)/(600-0)*.25*0.8))*fullcap;

        if nuclearoutput > fullcap
            nuclearoutput = fullcap;
        elseif nuclearoutput < 0.6*fullcap;
            nuclearoutput = 0.6*fullcap;
        end

    else
        nuclearoutput = 1*fullcap;
    end
else
    nuclearoutput = 1*fullcap;

end

elseif a == 0 && clock <= 6
    nuclearoutput = fullcap;
elseif a == 0
    nuclearoutput = modifiedcap;
else
    nuclearoutput = fullcap;
end

y = nuclearoutput;
```

Nuclear Annual Cost Function:

```
function y  = fcn(fullcap,power,allin)
% This function determines the total nuclear cost per second
% allin = switch which is > 0 if constant nuclear power
% fullcap = max nuclear reactor capacity
% power = power generated by nuclear reactors every hour when allin = 0

if allin > 0;                        % Indicates constant nuclear power
TICC = 4594.84*fullcap*1000;         % Installed MW Cap Cost
Oplife = 60;                         % years
rate = 0.05;                         % assumed interest rate
decomcost = 0.12*TICC;
TICCpersec = TICC*(1+rate)^(Oplife*0.46)/(Oplife*365*24*3600); %Cost per sec
```

```
decomcostpersec = decomcost/((1+rate)^(Oplife*0.46)*(Oplife*365*24*3600));
%Cost per sec

OMfixed = 64.43776*fullcap*1000;      % Installed MW Fixed Operating Cost
OMfixedpersec = OMfixed/(365*24*3600); % Fixed Operating Cost per sec

OMvariable = 0.0004824582/3600*fullcap*1000; %Variable operating cost per MW
produced

fuelcost = .003875283*fullcap; %Fuel cost per MW produced

else                                  % Indicates variable nuclear power
TICC = 4594.84*fullcap*1000;          % Installed MW Cap Cost
Oplife = 60;                          % years
rate = 0.05;                          % assumed interest rate
decomcost = 0.12*TICC;
TICCpersec = TICC*(1+rate)^(Oplife*0.46)/(Oplife*365*24*3600); %Cost per sec
decomcostpersec = decomcost/((1+rate)^(Oplife*0.46)*(Oplife*365*24*3600));
%Cost per sec

OMfixed = 64.43776*fullcap*1000;      % Installed MW Fixed Operating Cost
OMfixedpersec = OMfixed/(365*24*3600); % Fixed Operating Cost per sec

OMvariable = 0.0004824582/3600*power*1000; %Variable operating cost per MW
produced

fuelcost = .003875283*power; %Fuel cost per MW produced

end
y = fuelcost + OMvariable + OMfixedpersec + TICCpersec + decomcostpersec;
```

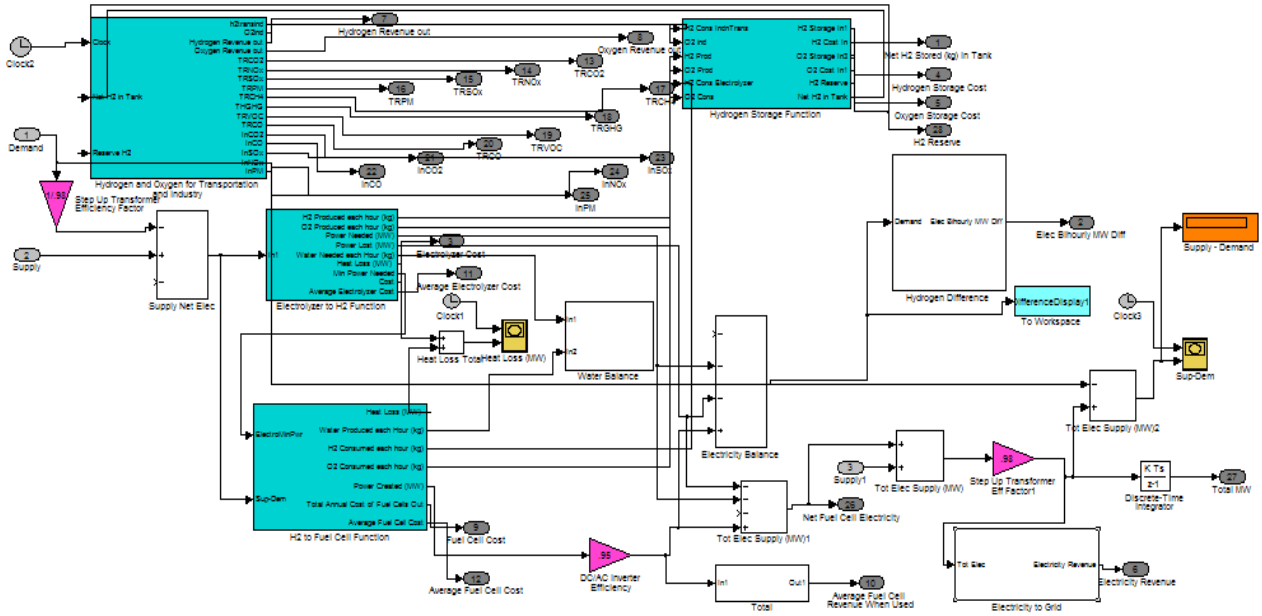

Figure 97: Overall Hydrogen Supply and Storage Subsystem

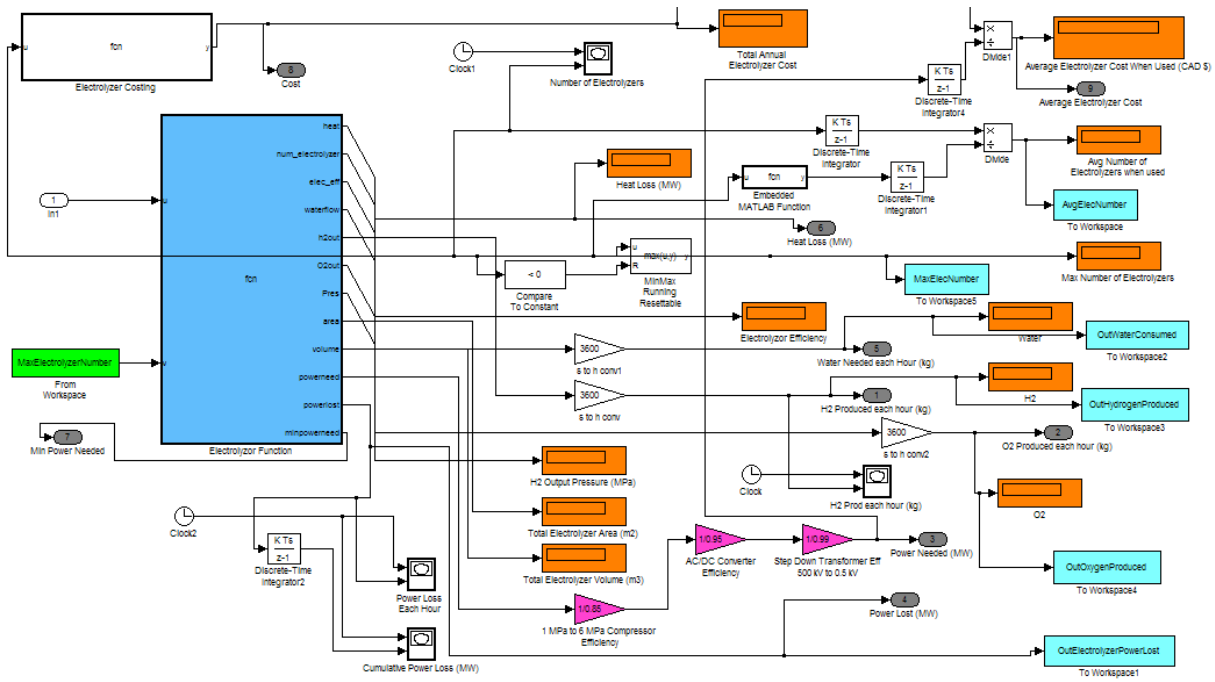

Figure 98: Overall Electrolyzer Subsystem

Electrolyzer Power Demand and Material Balance Function:

```
function
[heat,num_electrolyzer,elec_eff,waterflow,h2out,O2out,Pres,area,volume,power
need,powerlost,minpowerneed]= fcn(u,v)

% This block determines the power consumed by electrolyzers, hydrogen and
oxygen output,
% water needed, volume occupied by all the electrolyzer units, and excess
power lost.
% U = Hourly Power Supply - Hourly Power Demand
% V = Maximum number of Electrolyzers

% if elec avail is less than demand, h2 must be converted to elec with
% an efficiency of 67.31%

% Voltage Range: 400 - 600 V
% Cooling Water Temp: 32 C
% The overall dimensions are similar for HyStat-A and Hystat-Q outdoor
% Min 40% running, max 100%, ramp up time 4 sec, hence instantaneous
% Electrolyzers can be on standby when no excess elec is produced, hence no
% minimum power is needed


   % Data obtained from Hystat Electrolyzer stack, HyStat-Q
   % IMET 1000 series
   powercons = 5.2;            % Electrolyzer power consumption KWh/ Nm3 H2
   h2pres = 1;                 % MPa
   h2genmax = 960;             % Nm3/h max
   atmpres = 101325;           % Kpa
   stdtemp = 273;              % K
```

```
   h2heatcap = 143;            % MJ HHV / kg

   length = 2.9*16;            % m
   width = 12.2;               % m
   height = 2.4 ;              % m

   h2genkg = (h2genmax*atmpres/(8.3145*stdtemp))*2/1000; % Kg/h-electrolyzer
   h2genkg_per_second_electrolyzer = h2genkg/3600;
   preass_electrolyzer_num = v;
   transeff = 0.799425; % To account for all the storage efficiency losses
encountered (0.85*0.95*0.99)

if u < 0;
   powerloss = 0;
   totpowerneeded =  0;

   heat_loss = 0;
   electrolyzer_eff = 0;
   h2tot = 0;

   electrolyzer_num = 0;
   area = length*width*electrolyzer_num;
   volume = length*width*height*electrolyzer_num;

else

   powershift = u;
   electrolyzer_num = powershift/(powercons*h2genmax/(1000));
   if electrolyzer_num < 0.4;
       powerloss = powershift;
   totpowerneeded =  0;

   heat_loss = 0;
   electrolyzer_eff = 0;
   h2tot = 0;

   electrolyzer_num = 0;
   area = length*width*electrolyzer_num;
   volume = length*width*height*electrolyzer_num;

   else
       electrolyzer_num = ceil(powershift/(powercons*h2genmax/(1000)));
       electrolyzer_num_powerdmd = (powershift/(powercons*h2genmax/(1000)));

       if electrolyzer_num > preass_electrolyzer_num;
           electrolyzer_num = preass_electrolyzer_num;
           electrolyzer_num_powerdmd = preass_electrolyzer_num;
           powerloss = u - (powercons*h2genmax*electrolyzer_num/(1000));
       else
           powerloss = 0;
       end

       totpowerneeded =
powercons*h2genmax*electrolyzer_num_powerdmd/(1000);
```

```
        heat_loss = (-h2genkg_per_second_electrolyzer*h2heatcap +
powercons*h2genmax/1000)*electrolyzer_num_powerdmd;
        electrolyzer_eff =
(h2genkg_per_second_electrolyzer*h2heatcap)/(powercons*h2genmax/1000);
        h2tot = h2genkg_per_second_electrolyzer*electrolyzer_num_powerdmd;

        area = length*width*electrolyzer_num;
        volume = length*width*height*electrolyzer_num;
   end

end

% Inert gas is needed for electrolyzer
% Need 0.023 Nm3 / kg H2 produced
heat = heat_loss;
num_electrolyzer = electrolyzer_num;
elec_eff = electrolyzer_eff;
Pres = h2pres;
h2out = h2tot;
O2out = h2tot*16/2;
% Also need to account for water needed for cooling electrolyzers
waterflowh2 = h2tot + h2tot*16/2;            %kg water

waterflowcooling = h2tot*0.108*3.785*0.972;  %kg water for cooling
waterflow = waterflowh2+waterflowcooling;
powerneed = totpowerneeded*transeff;
powerlost = powerloss;
% Powerloss is to account for the excess power that was not converted to
% hydrogen due to electrolyzer size limitations
minpowerneed = 0;
```

Electrolyzer Costing Function:

```
function y = fcn(u)
% This function determines the annual cost for electrolyzers
% Assumed Interest Rate 5%
% U = Maximum number of electrolyzers used
TICC = u*960/485*3419479;
Oplife = 20;                          %years
Intrate = 1.05;
TICCperyr = TICC*Intrate^(Oplife*0.46)/(Oplife); %$Can /yr
Opcostperyr = 0.07*TICC;                         %$Can /yr


%Electrolyzers need to be refurbished every 10 years
%However, since electrolyzers are scrapped in yr 20
%the replacement cost only happens once, and can be paid for over
%electrolyzer lifetime
RepCostperyr = 0.3*TICC*(Intrate^(10*0.46))/((Intrate^(Oplife*.46))*Oplife);
%$Can/yr


y = TICCperyr + Opcostperyr + RepCostperyr;
```

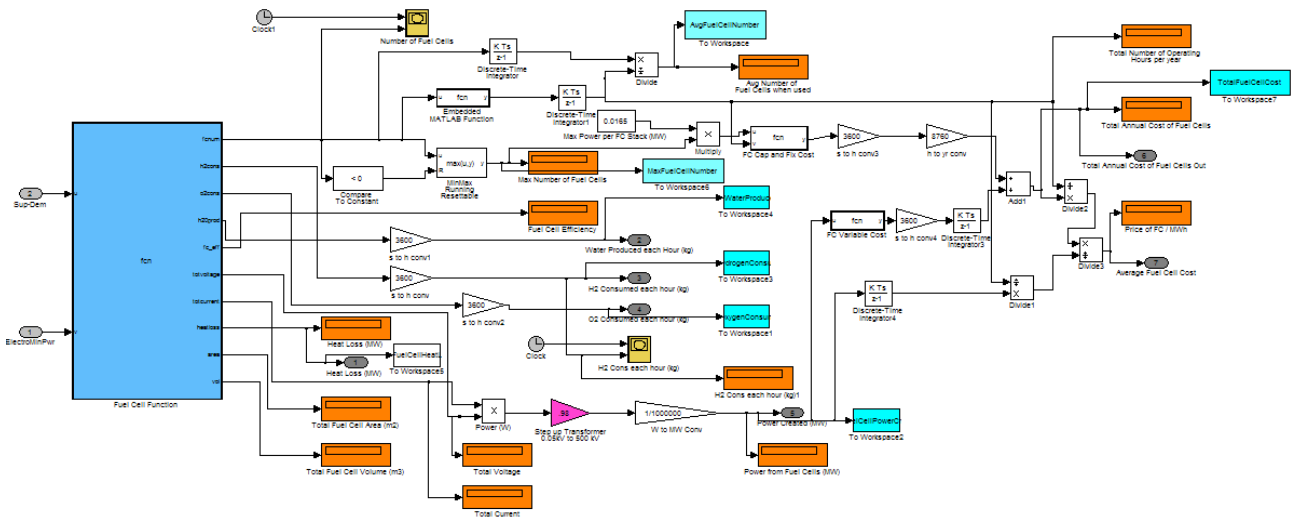

Figure 99: Overall Fuel Cell Subsystem

Fuel Cell Power Output and Material Balance Function:

```
function [fcnum, h2cons, o2cons, h20prod, fc_eff, totvoltage, totcurrent,
heatloss, area, vol]= fcn(u,v)

% This function determines the power output from fuel cells, as well as heat
produced,
% hydrogen consumed, oxygen consumed from air, water produced, and total
volume
% occupied by fuel cell equipment.

% U = Hourly Power Supply - Hourly Power Demand
% V = Minimum power needed for electrolyzers = 0 MW

% Using HyPM HD 16 as the reference stack module from Hydrogenics
% if elec avail is less than demand, h2 must be converted to elec with
% an efficiency of 53%. This means 53% of hydrogen energy content is
% converted to electricity

% Voltage Range: 40 - 80 V
% Optimal Voltage: 50 V
% Instantaneous Start-Stop possibility with fuel cell


optimalvoltage = 50;            % V
maxcurrent = 330;               % A
fc_eff = 0.53;
depress_eff = 0.931;            % to account for losses during power
transmission
h2energycontent = 143;          % MJ/kg

% Dimensions of each stack in metres

length = 0.949;
width = 0.448;
```

```
height = 0.312;

if u-v < 0;
peakpower = 16.5 / 1000;        % MW
fcnum = v/(depress_eff*peakpower) + (-u/depress_eff)/peakpower;

totvoltage = optimalvoltage;
totcurrent = maxcurrent*fcnum;
h2cons = totvoltage*totcurrent/(fc_eff*h2energycontent*1000000);       %
kg/s
o2cons = h2cons*16/2;                                                  %
kg/s
h20prod = h2cons + o2cons;                                             % kg
heatloss = (1-fc_eff)*totvoltage*totcurrent/1000000;                   % MW
area = length*width*fcnum;                                             % m2
vol = length*width*height*fcnum;                                       % m3

else
    h2cons = 0;
    o2cons = 0;
    h20prod = 0;
    heatloss = 0;
    totvoltage = 0;
    totcurrent = 0;
    fcnum = 0;
    area = 0;
    vol = 0;
end;
```

Fuel Cell Yearly Fixed Cost Function:

```
function y = fcn(u,v)

% This function determines the fixed cost for fuel cells per second
% U = maximum power output from fuel cell stacks in a year
% V = total operating hours of fuel cell stacks in a year

capcost = (u*1500*1000/0.92);      % Cap cost for Fuel cell

hrnum = v;

if hrnum < 1600                    % Assumed fuel cell stacks will not last
    hrnum = 1600;                  % more than 2.5 times operating life
end;

Intrate = 1.05;
Oplife = 5*4000/hrnum;             % years (since a typical fuel cell is
                                   % designed for 4000 hours/yr,
                                   % less hours means longer lifespan
TICCpersec = capcost*Intrate^(Oplife*0.46)/(Oplife*365*24*3600); % $Can /s
FxdOpcost = (u*1000/0.92*5.65)/(3600*365*24);                    % $Can /s
y = TICCpersec + FxdOpcost;
```

Fuel Cell Variable Cost Function:

```
function y = fcn(u)
% This function determines the variable fuel cell cost per second
% U = Power output from fuel cells (MW)
y = (u*1000*0.04792/.92)/3600; % Cost in Can$ /s
```

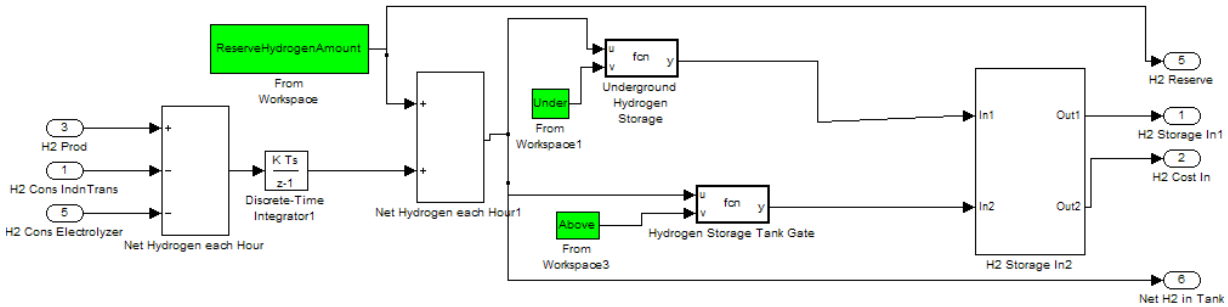

Figure 100: Overall Hydrogen Storage Subsystem

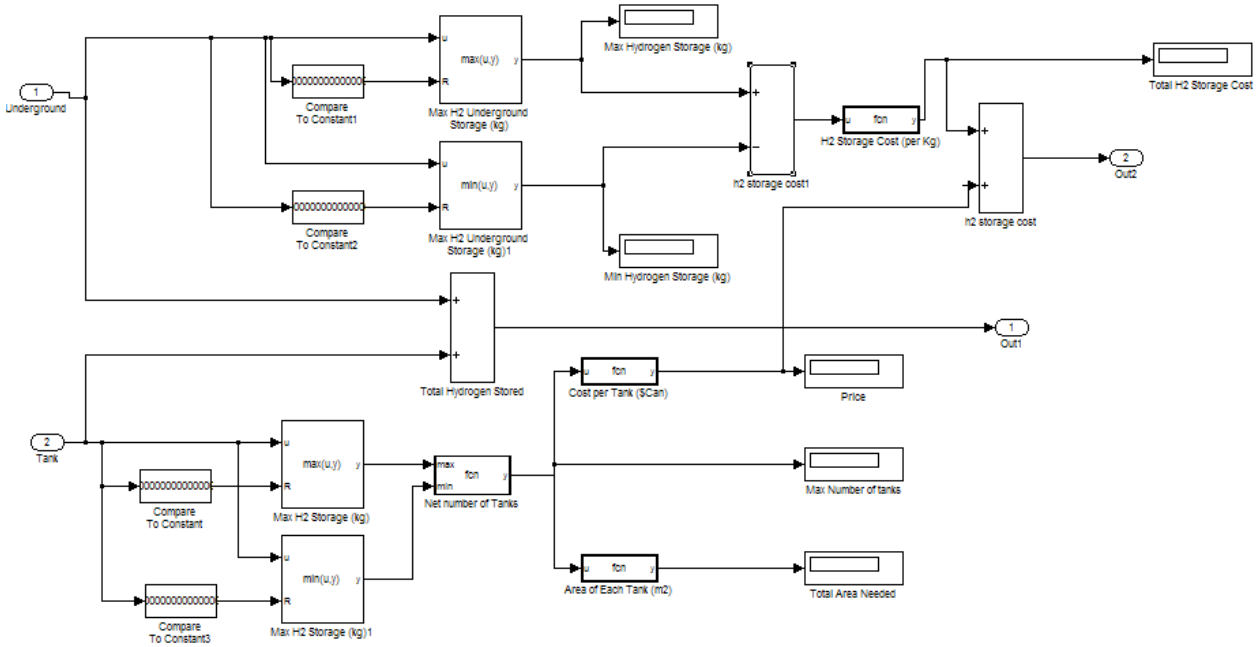

Figure 101: Hydrogen Storage Cost Estimate Schematic

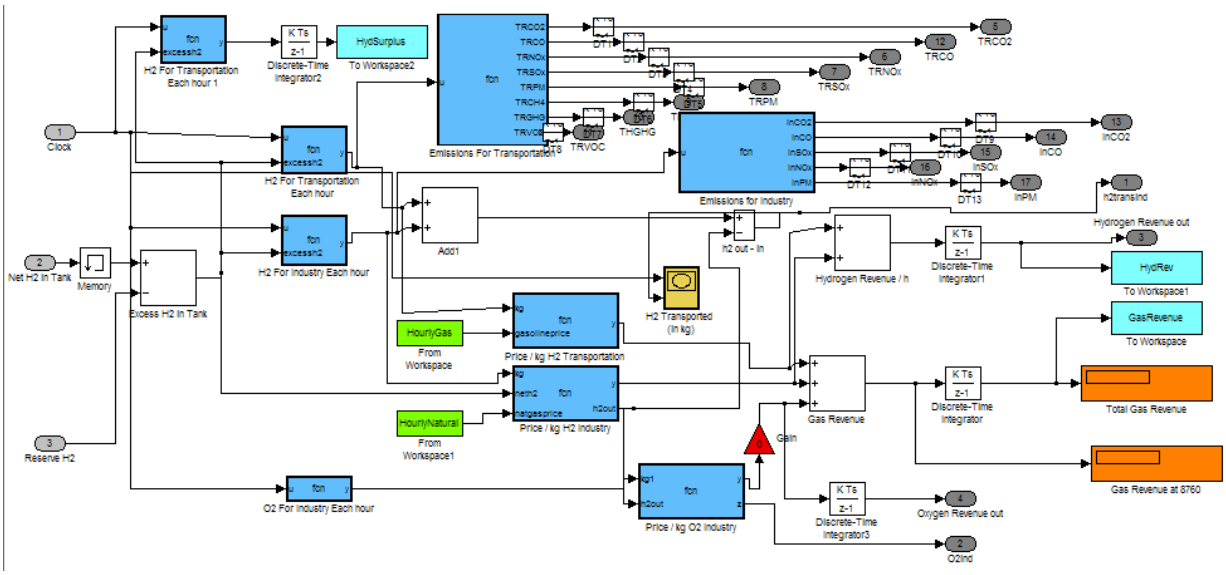

Figure 102: Overall Hydrogen for Transportation and Industry Subsystem

Hydrogen Price for Transportation Function:

```
function y = fcn(kg,gasolineprice)

% Avg h2 price for transportation:
% 1 kg of h2 has 143 MJ of energy
% 1 L of gasoline has 32 MJ of energy
% H2 energy to propulsion efficiency is 40%
% Gasoline energy to propulsion efficiency is 25%
% We assume of the current gasoline price, 30% goes towards transportation
and taxes
% Hence revenue is 70% of equivalent price of gasoline price at pump can be
generated for H2

% Assuming 20 year lifespan, once inflation is considered, the price of oil
is expected to rise at
% a real growth rate of 3.885%

Infladj = 1*1.03885^(20*.46);

H2totprice = gasolineprice*(143/32)*(0.40/0.25)*0.7*kg*Infladj;

y = H2totprice;
```

Hydrogen Price as Industrial Gas Function:

```
function [y,h2out] = fcn(kg,neth2,natgasprice)

% Avg h2 price for Industry:
% According to Chris Kassell from Air Liquide
% H2 price for industry ranges from $150 to $300
% for an 8m3 tank at 2500 psi and 298 K
% This averages out to $2.02 / kg H2
% A key factor is the price of natural gas / mmBTU
```

```
% Average price of natural gas is assumed $7 / mmBTU
% Hence nat gas to h2 price ratio is 2.02/7

Infladj = 1*1.052915^(20*.46);

H2totprice = natgasprice*(2.02/7)*kg*Infladj;

minamt = 40000;
upperadj = 1.2;      % To ensure quick refill of hydrogen if h2 supply for
                     % fuel cell dwindles

if neth2 < minamt;
H2totcost = natgasprice*(2.02/7)*(neth2-minamt)*upperadj*Infladj;
neth2 = neth2 - minamt;
else
    neth2 = 0;
    H2totcost = 0;
end
y = H2totprice+H2totcost;
h2out = -(neth2)*upperadj;
```

Emissions Averted Using Hydrogen Fuel Cells for Transportation Function:

```
function [TRCO2, TRCO, TRNOx, TRSOx, TRPM, TRCH4, TRGHG, TRVOC] = fcn(u)

% The Emissions data is obtained from the file Emissions from lightweight
vehicles and industry
TRCO2 = 18.56725 * u;               % Kg / Kg H2
TRCH4 = 0.00073875 * u;             % Kg / Kg H2
TRGHG = 18.76425 * u;               % Kg / Kg H2
TRVOC = 0.008865 * u;               % Kg / Kg H2
TRCO = 0.18444125 * u;              % Kg / Kg H2
TRNOx = 0.00694425 * u;             % Kg / Kg H2
TRPM = 0.002167 * u;                % Kg / Kg H2
TRSOx = 0.0002955 * u;              % Kg / Kg H2
```

Emissions Averted Using Electrolyzers for Hydrogen Instead of Natural Gas Function:

```
function [InCO2, InCO, InSOx, InNOx, InPM]= fcn(u)

%The Data is from the word file: Emissions from light vehicles and
Industries.

InCO2 = 10.158 * u;    % Kg / Kg H2
InCO = 0.003473 * u;   % Kg / Kg H2
InSOx = 0.000608 * u;  % Kg / Kg H2
InNOx = 0.007988 * u;  % Kg / Kg H2
InPM = 0.000087 * u;   % Kg / Kg H2
```

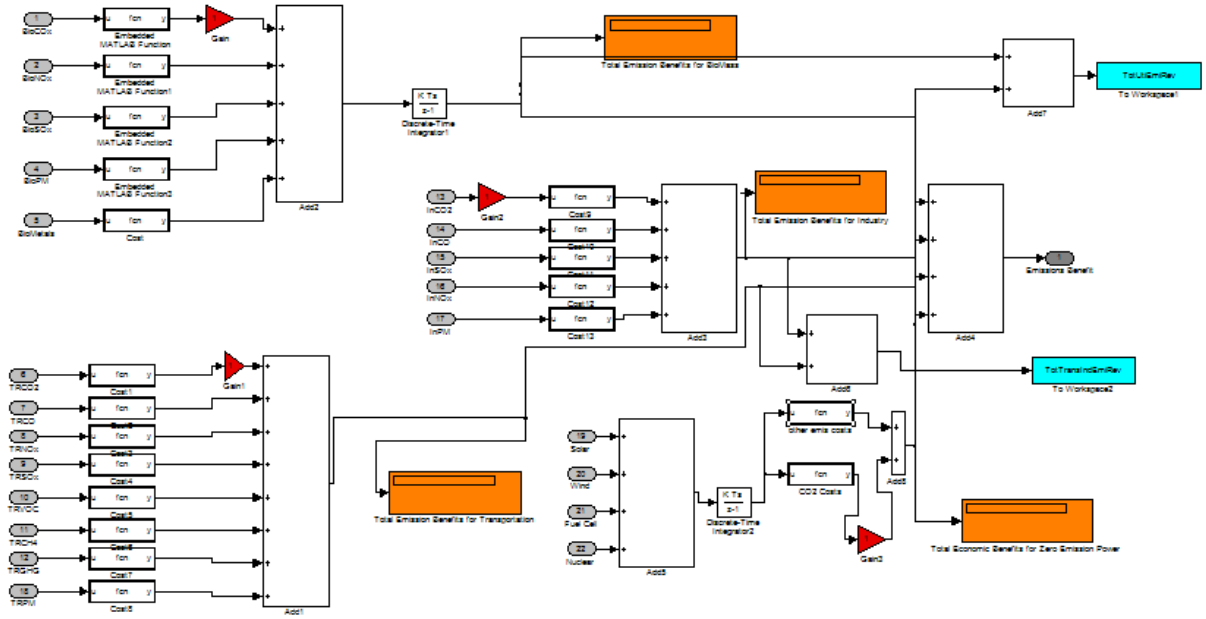

Figure 103: Overall Environmental Emissions Subsystem

Emissions from Coal Plants Costing Function:

```
function y = fcn(u)

% Price obtained from Excel Spreadsheet "Nanticoke Environmental Emissions"

% NOx
NOx = 0.2784 * 1.227189 * u;
% (Price / Kg)*(kg / MW Coal Power)*(MW Clean Power)

%SOx
SOx = 0.2784 * 3.697745 * u ;

%PM
PM = 0.8436 * 0.128664 * u;

%Metals
Metals = 0 * 0.0005796 * u;

%VOC
VOC = 0.4735 * 0.002578 * u;

%CO2
CO2 = 0.0275 * 938.56 * u;

y = NOx + SOx + PM + Metals + VOC + CO2;
```

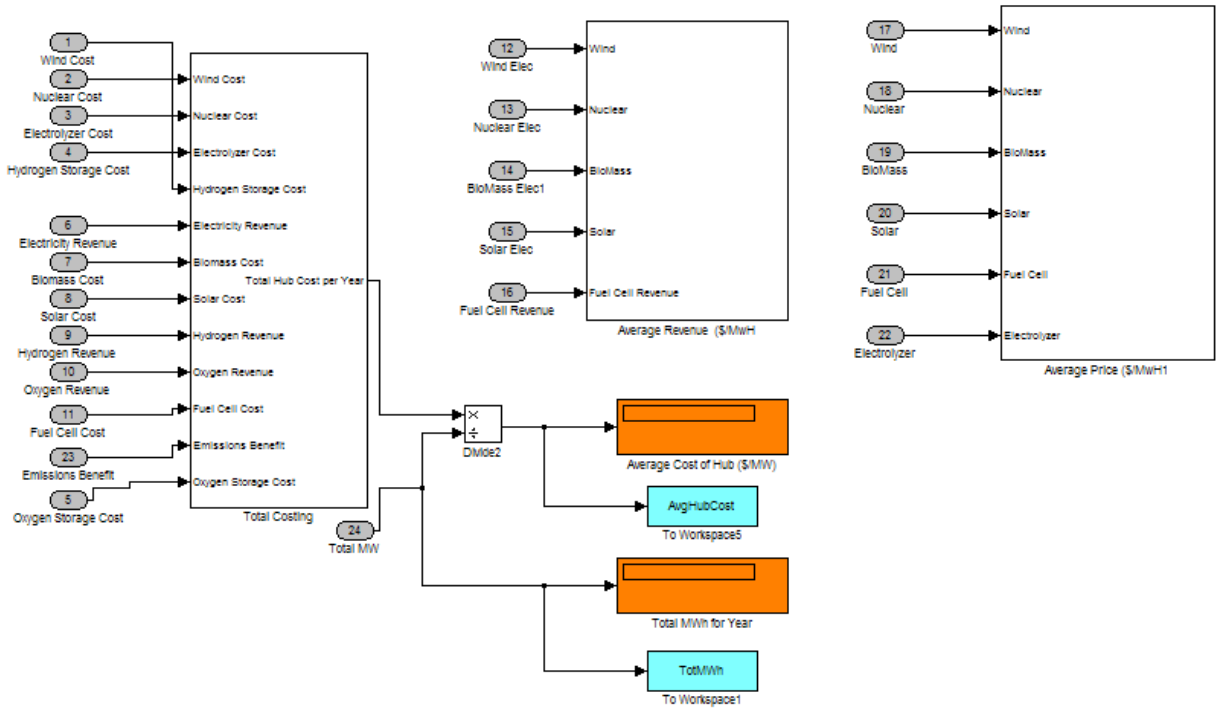

Figure 104: Overall Costing Output Subsystem

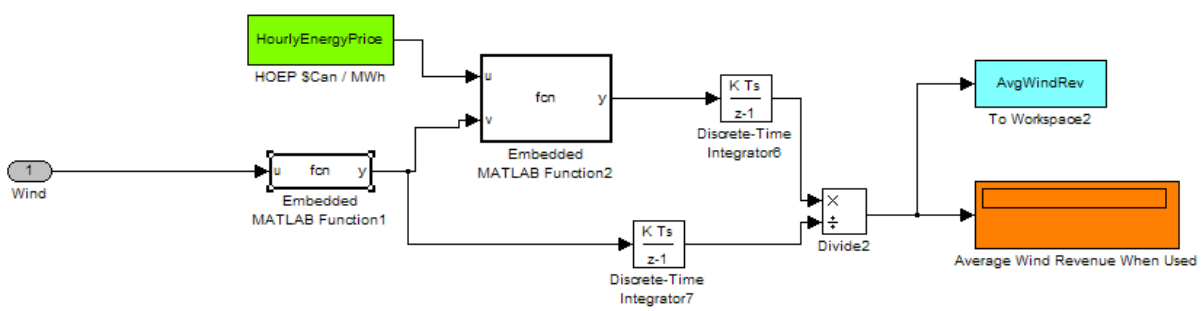

Figure 105: Sample Average Revenue From Energy Source Calculation Subsystem

Power Output Switch Function:

```
function y = fcn(u)
% This function is a switch that becomes 1 when power
% output from source is greater than 0.
if u > 0
    counter = 1;
else
    counter = 0;
end
y = counter;
```

Energy Price Multiplier Function:

```
function y = fcn(u,v)
% This function multiplies the power output with current energy price
```

```
% when power output from source is greater than 0.
% U = Power Output from Source
% V = Switch function output
if v > 0
    y = u;
else
    y = 0;
end
```

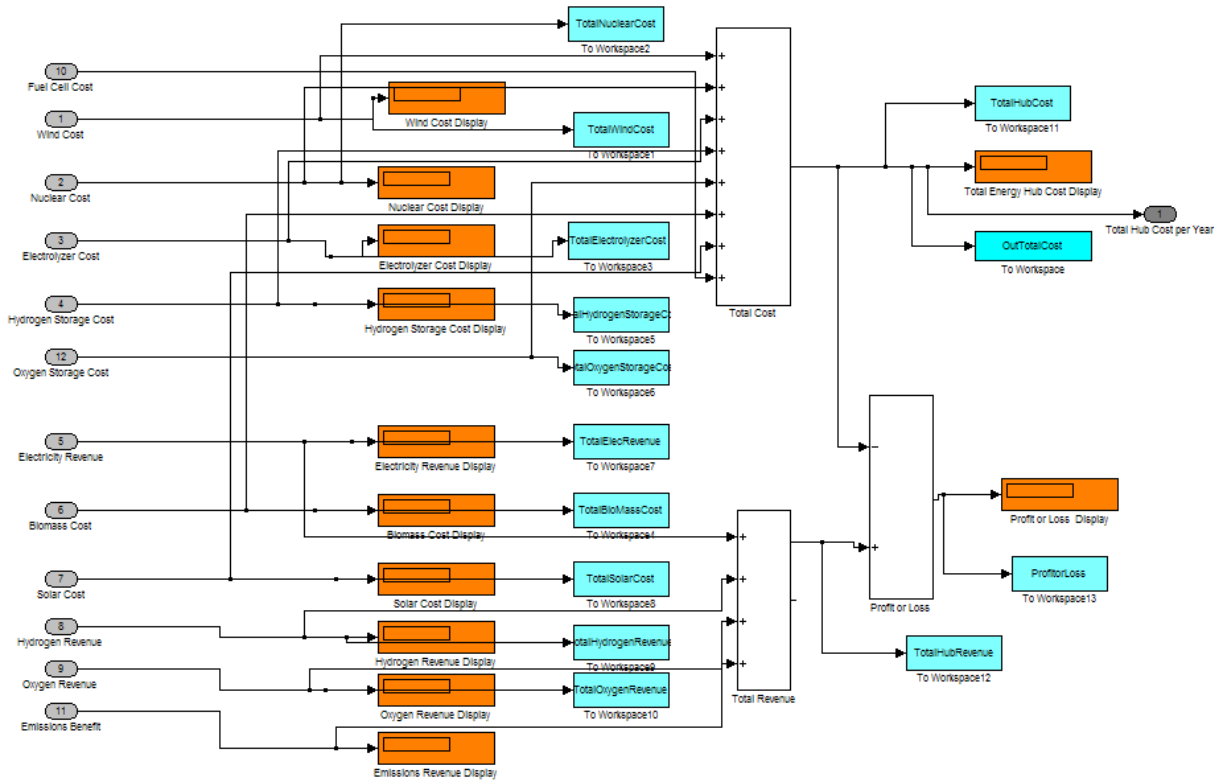

Figure 106: Overall Energy Hub Profit / Loss Display Subsystem

Appendix B: Electricity Demand and Price Data

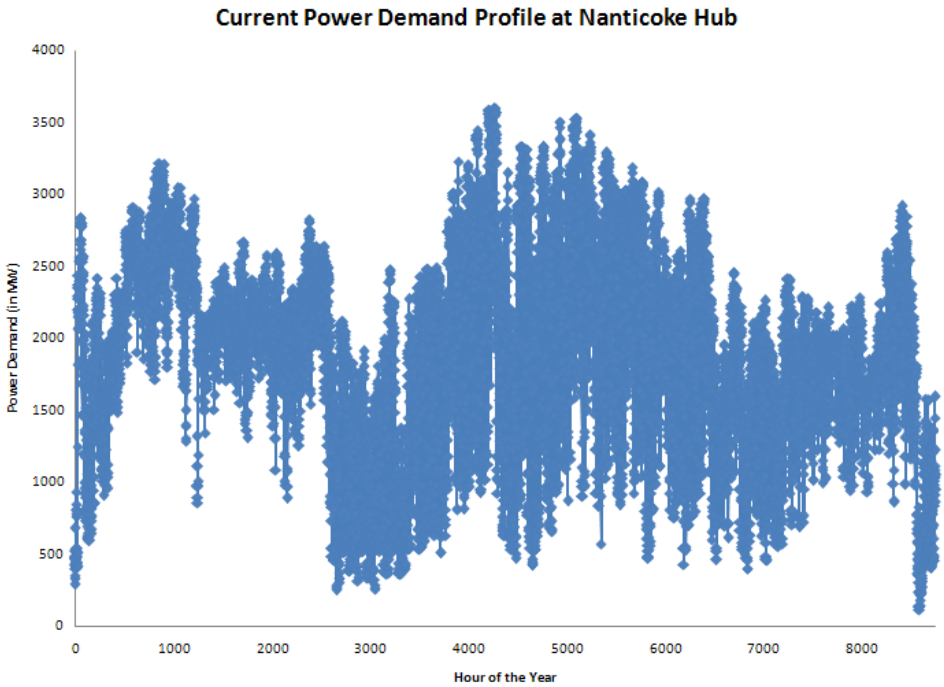

Figure 107: Yearly Power Demand Profile at Nanticoke

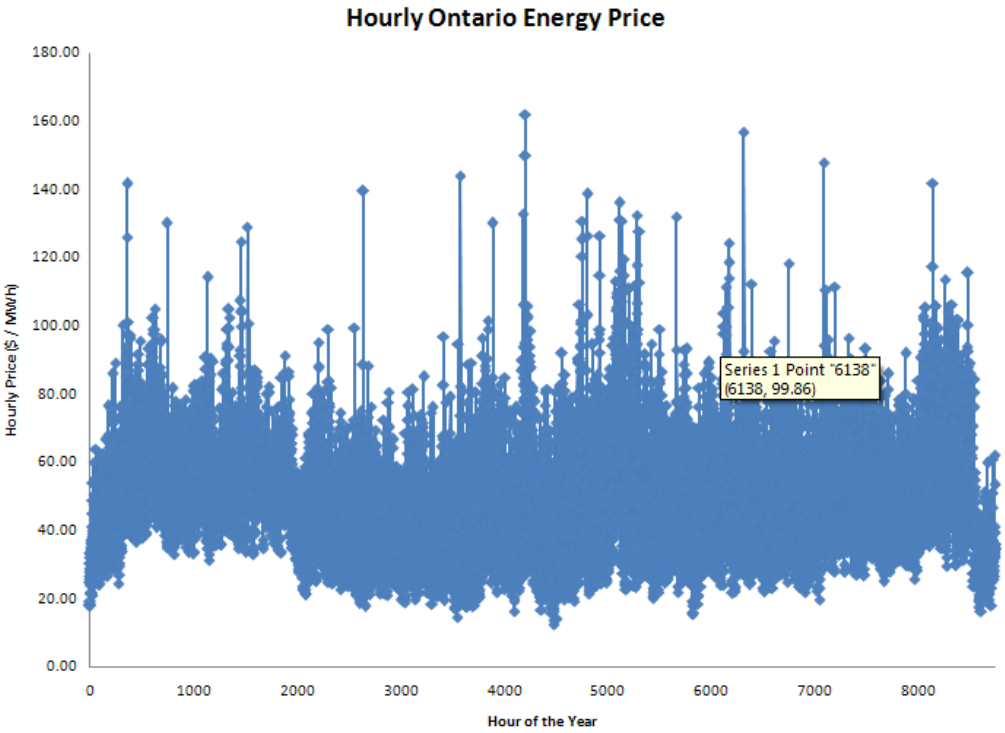

Figure 108: Hourly Ontario Electricity Price

Appendix C: Solar Power Data

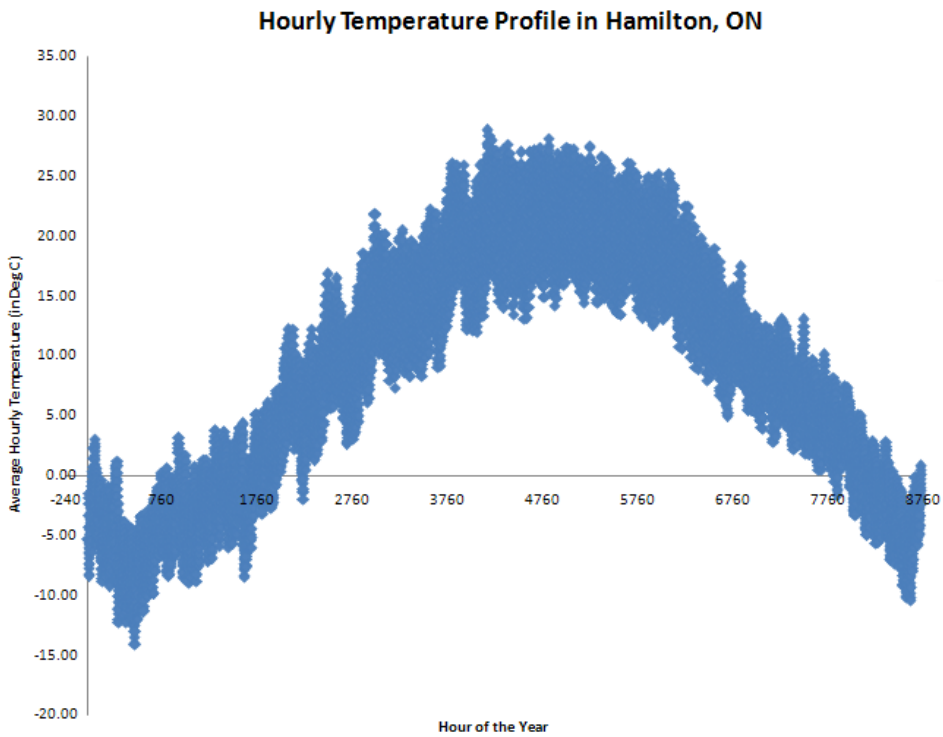

Figure 109: Yearly Air Temperature Profile at Hamilton, ON

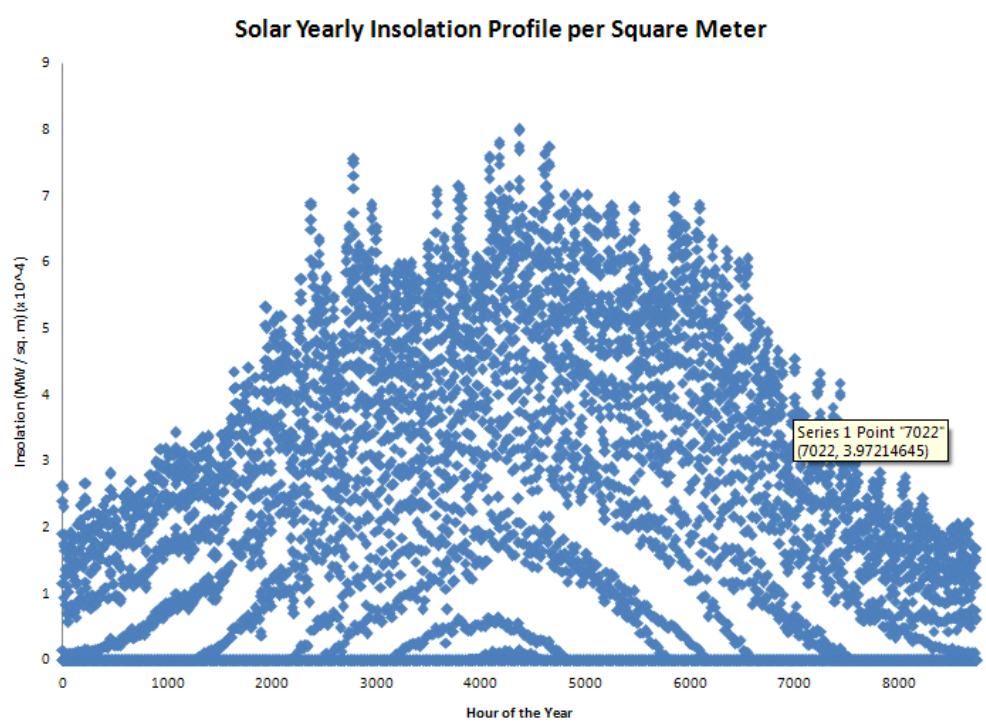

Figure 110: Solar Insolation Profile (MW/m^2) in Nanticoke, ON

Appendix D: Wind Power Data

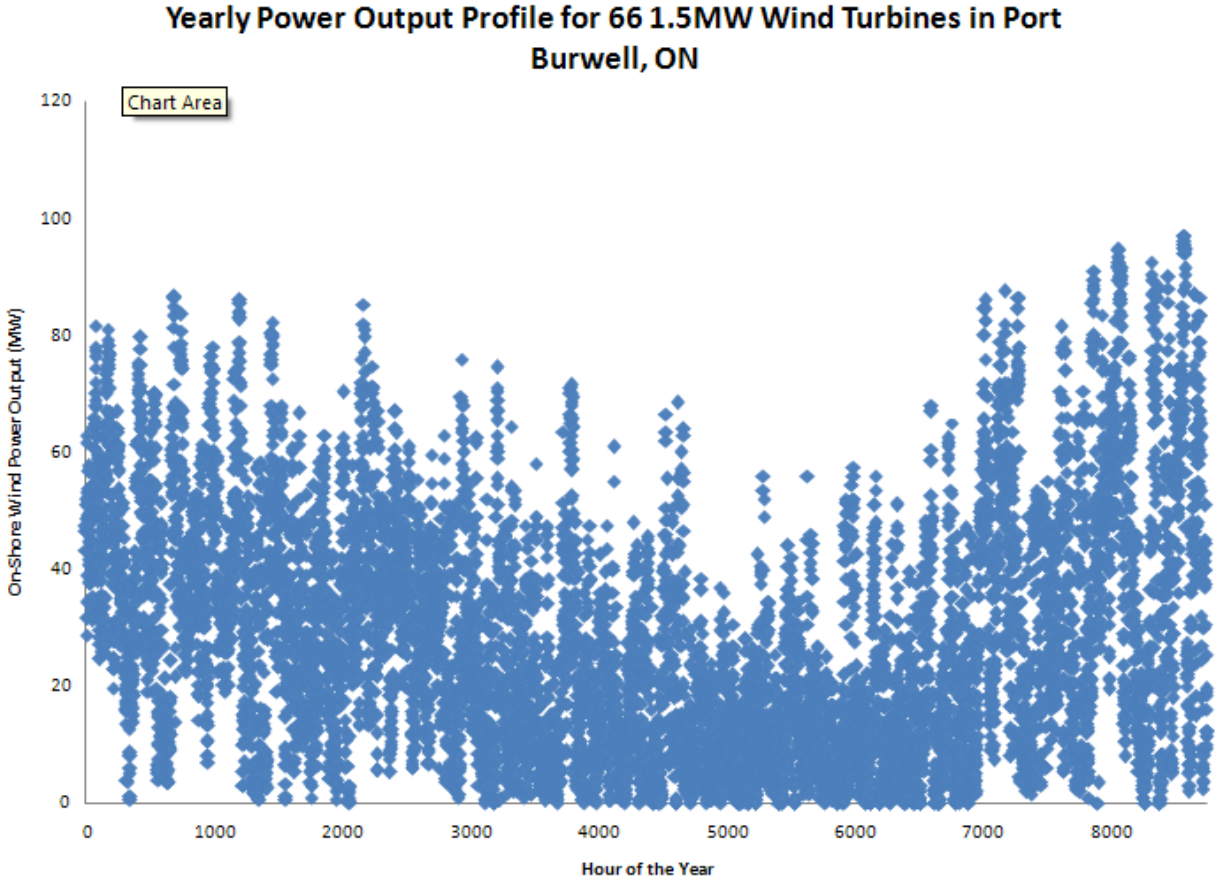

Figure 111: Yearly Wind Power Output Profile in Port Burwell, ON

Appendix E: Gasoline and Natural Gas Price Reference Data

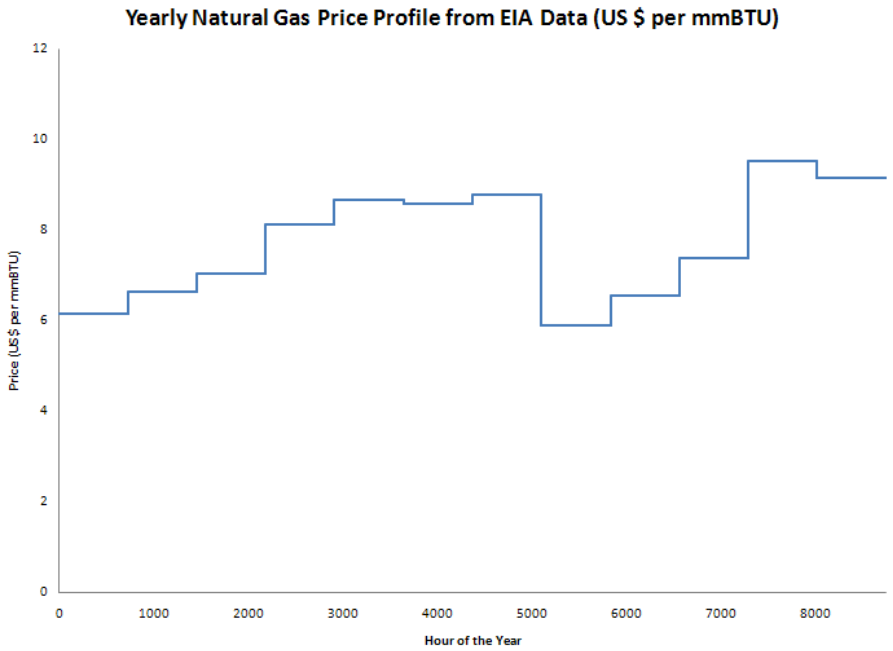

Figure 112: Average Yearly Natural Gas Price Fluctuation Based on EIA Data from 2001 to 2008

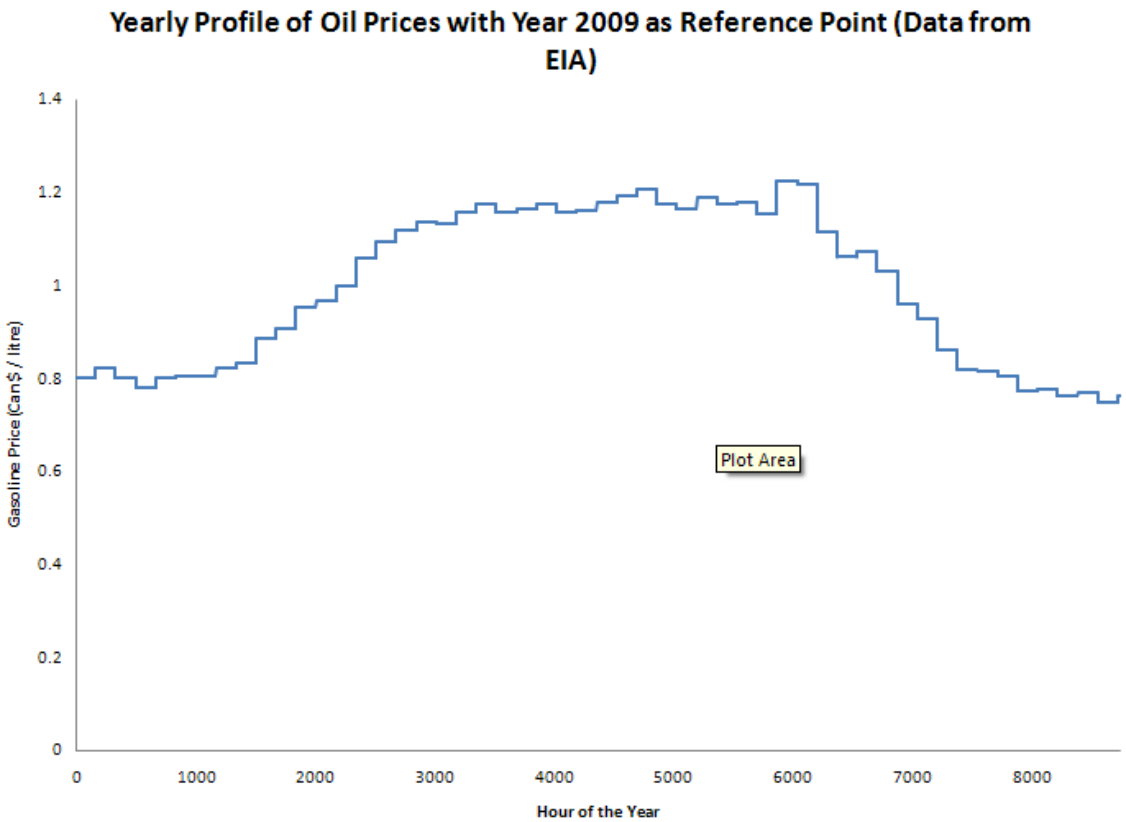

Figure 113: Yearly Profile of Gasoline Prices in Canada based on Profiles Observed for years 2003 to 2008 and using year 2009 as reference for gasoline price