OT-88-07-3

GLAZING SYSTEM U-VALUE MEASUREMENT USING A GUARDED HEATER PLATE APPARATUS

J.L. Wright, P.Eng.
ASHRAE Student Member

H.F. Sullivan, Ph.D., P.Eng.
ASHRAE Member

ABSTRACT

Precise heat transfer measurements have been carried out during the last 20 years using a guarded heater plate apparatus. This apparatus has been adapted and used over the last several years to perform U-value measurements on a variety of prototypical glazing systems. Results from two sets of measurements are presented. One set of results quantifies heat transfer across stagnant air layers containing an intermediate fluorinated ethylene-propylene (FEP) glazing and bounded by plates of various emissivities. The second set consists of C-values (i.e., glass-to-glass U-values) for a set of glazing systems that incorporate up to four glazings, one of two solar-control metal coatings and up to two intermediate glazings made of FEP film. In each case the measured results are compared to simulation. In the first study the discrepancy between measured and calculated heat transfer rates was less than 2% in all cases. In the second study the discrepancy was never greater than 8% and was less than 3% in the majority of cases. These results indicate that the test method used is well suited to the reliable measurement of glazing system U-value. It is a useful tool as a developmental test procedure for glazing system design because it can be carried out quickly and at low cost. The apparatus and procedure are described in detail.

INTRODUCTION

The guarded heater plate apparatus consists primarily of two parallel copper plates (each 25x25x0.5 in [635x635x12.7 mm]), positioned facing each other, that can be maintained at different but constant temperatures. Each plate is held at its desired temperature by a constant temperature circulating bath that pumps a steady flow of water and glycol through a manifold of tubes attached to the back of the copper plate. The warm copper plate contains three guarded heater plates. These three heater plates (each 7.875x7.875 in [200x200 mm]) lie in recesses located in a row across the center of the warm copper plate. This heater plate arrangement is shown in Figure 1. It is possible to measure the heat transfer that occurs over the face of each of the guarded heater plates. An earlier version of the copper plates contained only one guarded heater plate at the center of the warm copper plate. This configuration was capable of measuring heat transfer at the center region only, and no heat transfer information at the edges could be gathered.

Each heater plate is positioned in a recess so that the flat face of the heater plate is flush with the surface of the warm copper plate, as indicated in Figure 2. Each heater plate is also made of copper. Thus, with the heater plates properly positioned, the full surface of the warm copper plate appears to be flat and continuous. The experimental measurement of heat transfer involves the adjustment of the electrical power supplied to the nichrome wire in a heater plate until zero temperature difference is measured between that heater plate and the larger copper plate in which it is embedded. Once this condition is reached there can be no heat transfer between the heater plate and the warm copper plate and all of the electrical power

John L. Wright, Research Engineer, Department of Mechanical Engineering, University of Waterloo, Waterloo, Ontario, Canada, and H.F. Sullivan, Professor, Department of Mechanical Engineering, University of Waterloo, Waterloo, Ontario, Canada

supplied is transferred across the gap to the cold copper plate. The temperature difference between the heater plate and the warm copper plate is sensed by a heat flux meter that is sandwiched between these two plates. The heat flux meter is a flexible, rubbery disk that contains a thermopile with a large number of junctions. Since the output voltage of the heat flux meter requires no electronic conditioning, no danger of a voltage offset exists. Therefore, it is an ideal device for detecting the desired null condition.

Many basic research studies have been carried out using the guarded heater plate apparatus all of which quantified heat transfer due to natural convection that occurred in the gap between the copper plates. These studies have uncovered information about the stability of horizontal and inclined air layers heated from below (1,2), heat transfer in vertical and inclined air layers (2,3,4,5,6,7,8), heat transfer in air layers where one surface is v-corrugated (9) and heat transfer across air layers containing a wide variety of convection suppression devices (1,10,11,12,13,14,15). In each case, a Nusselt number (Nu), a dimensionless representation of the rate of heat transfer due to convection, was defined and examined as a function of those variables that drive and determine the characteristics of the convective flow. In configurations where the radiative and convective heat transfer modes are not coupled (e.g., by a convection suppression device such as a honeycomb) and where the air layer geometry has been fixed (e.g., cavity aspect ratio, tilt) Nu is found to be solely a function of the Rayleigh number, Ra. Treating air as an ideal gas, Ra can be expressed as:

$$Ra = \frac{P^2 \, g \, \Delta T \, C_p \, L^3}{R^2 \, k \, Z^2 \, \mu \, T_m^3} \quad \text{, dimensionless} \qquad (1)$$

where,

P = pressure (absolute)
g = gravitational acceleration
ΔT = temperature difference across the air layer
C_p = specific heat of air
L = thickness of air layer (plate spacing)
R = universal gas constant
k = thermal conductivity of air
Z = compressibility factor for air
μ = viscosity of air
T_m = mean temperature of air layer (calculated as the arithmetic mean of the adjacent surfaces temperatures)

It can be seen that, aside from the properties of the air itself (C_p, k, μ, Z) and the constants (R, g), Ra is a function of the conditions imposed on the air layer, namely T_m, L, ΔT, and P. During experimental convection studies, many heat transfer measurements are made for imposed conditions that represent a wide range of Ra. The value of Ra is held constant during each measurement. Ra is varied between measurements but is not controlled by changing T_m, L or ΔT. Rather, the guarded heater plate apparatus can be housed in a pressure vessel providing the unique capability of controlling Ra by controlling the pressure of the air layer between the plates. Pressure control, control of electrical current supplied to the heater plates and data acquisition have been carried out, in recent years, by an automated system in order to gather the large amount of data necessary for studies of natural convection.

In contrast, the measurement of glazing system U-value using the guarded heater plate apparatus is a relatively simple procedure. U-value testing is carried out at atmospheric pressure, so the measurement does not need to be done inside a pressure vessel. Comparatively few measurements are needed and therefore adjustments made in the course of the experimental procedure can be performed manually and with a high degree of precision.

GLAZING SYSTEM HEAT TRANSFER MEASUREMENT

Adaptation of Apparatus

Each glazing system tested is placed between the two flat copper plates. It is desirable that the glazing system under test be about the same size as the copper plates. In order to prevent direct contact between the copper and glass surfaces and to promote good thermal contact, 0.130 inch (3.30 mm) thick sheets of neoprene (rubber) are placed between the glazing system and the copper plates. Figure 3 shows a cross-sectional view of a triple-glazed sealed glazing unit as it might appear when installed between the plates.

Once the glazing system is securely fastened in place, the plates are fixed at the desired tilt angle. Next, the outside of the copper plates/glazing system assembly is completely covered with insulation in order to prevent thermal losses from (or gains to) what would otherwise be the exposed backsides of the copper plates. The insulation also prevents the formation of condensed water vapor and/or frost on the cold copper plate and headers.

After the insulation is in place, the constant temperature baths that feed the two copper plates can be started. The time required for the temperatures of these baths to reach steady state depends on the thermostat settings that are being used (i.e., the temperature differential being used for the test) and on the capacity for heating or cooling that the baths can provide. Generally, the warm side temperature is above room temperature and the warm bath reaches steady state within 10 or 15 minutes. The cold side bath currently in use takes several hours to reach a temperature of 14 F (-10 C).

Measurement Procedure

In order to measure the heat flux from the exposed surface of a guarded heater plate, it is necessary to measure the rate at which electrical energy is supplied to the heater plate, Q_e, and the heat flux meter output voltage, HFMV. The electrical power supplied to the heater plate is simply:

$$Q_e = I_h \cdot V_h \qquad (2)$$

where, I_h = current measured through the heater wire
V_h = voltage drop through the heater wire

The heater wire voltage, V_h, is measured directly using a digital volt meter. During previous convection studies the heater current, I_h, was measured by measuring the voltage across a calibrated shunt resistance. More recent studies have included the accurate calibration of the heater wire resistance (nominally 10.45Ω), which allows I_h to be determined directly from V_h (and the temperature of the heater plate). Currently, when experiments are performed to determine glazing system U-values, I_h is measured directly using a digital multimeter. This method simplifies the experimental procedure as well as the calculational procedure used for data reduction.

The measurement of heat transfer during studies of natural convection has involved the adjustment of Q_e (through the adjustment of a regulated D.C. power supply) while observing the resulting change in HFMV. This adjustment was carried out until HFMV was small and the difference in temperature between the heater plate and the warm copper plate was also small (8). It is necessary that HFMV be small enough that the boundary condition along the warm side of the convecting air layer is close to being isothermal so that no irregularities in the convective flow field are created. The heat flux from the face of the heater plate, q, is then calculated as:

$$q = (Q_e - \alpha \cdot HFMV)/A_{hp} \qquad (3)$$

where, α = heat flux meter calibration constant
A_{hp} = face area of the heater plate

This method of determining the heater plate heat flux was appropriate in that it was not necessary to adjust the power supply setting until HFMV was exactly zero and a large number of measurements could be made with a minimum of time and effort. However, it was necessary to perform a detailed calibration experiment prior to the formal experimentation in order to determine α.

When a glazing system heat transfer measurement is made, it is more convenient to adjust the power supply setting until HFMV is exactly zero (within the resolution of our ability to measure it). In this case the heat flux at the face of the heater plate can be calculated according to Equation 3 and no calibration constant is needed ($q = Q_e/A_{hp}$).

During the experiment, it is necessary to adjust the power supply (for each heater plate) a number of times before the heat flux meters are satisfactorily balanced. After each adjustment it is necessary to wait for at least 20 minutes before steady state is re-established and new HFMV readings can be taken. In order to monitor the time-dependent changes in the heat flux meter signal, HFMV is recorded using a strip chart recorder. A sample of one of

these records is shown in Figure 4. It can be seen in Figure 4 where HFMV reached steady state and a reading was made on three occasions. The power supply was adjusted following the first two readings. It is also noteworthy to see in Figure 4 that HFMV has a consistent cyclic swing of approximately ±0.2 mV. This fluctuation is caused by the on/off nature of the heaters in the constant temperature baths as their thermostats trip on and off. Even though the constant temperature baths are capable of temperature regulation to within ±0.01C, the heat flux meters are sensitive enough that they can detect the operation of the bath heaters. The reading of the HFMV value that is done "by eye" using the HFMV chart recorder trace is the largest source of uncertainty in the measurement procedure. A pessimistic estimate of the accuracy in this reading is ±0.1 mV. This error corresponds to an error in measured heat flux of approximately ±0.56 W/m^2 (depending on the particular test section being used), which translates into a U-value error of about ±1% for a glazing system with an indoor/outdoor U-value of 1.0 W/m^2C being tested at a temperature difference of 40°C. Errors associated with the measurement of temperature difference between the plates and the rate of energy dissipation at the heater plates are considerably smaller.

As the experiment proceeds and the various readings are compiled, it is useful to graph the measured values of Q_e as a function of the measured values of HFMV. Figure 5 shows a sample set of results for one experimental run where the center heater plate was being balanced so that $HFMV_2$ was zero. The $HFMV_3$ readings of Figure 5 were taken from the chart recorder trace of Figure 4. Generally, the plotted points lie in a straight line and can be used to determine the next setting of the power supply voltage. If the heater plate is eventually balanced so that HFMV is very close to being zero but not exactly zero, it is possible to estimate the desired value of Q_e (at HFMV=0) graphically by constructing a straight line using the previously measured points. In fact, this is equivalent to using Equation 3 where the slope of the line through the points gives α, the heat flux meter calibration constant that is appropriate for that particular test section.

Once the heat flux, q, has been measured, the glass-to-glass U-value of the glazing system, C, can be calculated. This is done using Equation 4.

$$C = [(\Delta T/q) - 2R_n]^{-1} \qquad (4)$$

where, ΔT = temperature difference between the warm and cold copper plates
R_n = thermal resistance of neoprene sheet = 0.097 hr ft^2 F/Btu (0.017 m^2C/W)

The value of R_n was measured directly using the guarded heater plate apparatus. The measured result was in good agreement with the tabulated thermal conductivity of neoprene (0.0021 W/cm K) found in reference 16.

The temperature difference between the copper plates is measured using a copper-constantan thermopile with six thermocouple junctions in each plate. A correlation has been developed for the purpose of natural convection studies that provides the conversion between thermopile output voltage, EMF, and temperature difference (9). This is:

$$\Delta T = 9.259 \times 10^{-2} \cdot EMF/DEN + 2.049 \times 10^{-7} \cdot EMF^2/DEN^3 + 9.072 \times 10^{-13} \cdot EMF^3/DEN^5 \quad \text{, Celsius degrees} \qquad (5)$$

where, $DEN = 2.14 \times 10^{-2} + 4.781 \times 10^{-5} \cdot T_h$

T_h = temperature of the warm copper plate, C

Alternatively, knowing EMF, T_h and the number of thermocouple junctions in each plate, the temperature difference between the copper plates can be found using a standard T-type thermocouple table. Note also that the temperature difference between the heater plate and the cold copper plate can be slightly different than ΔT when HFMV is not equal to zero, but no correction is needed when HFMV=0.

The measured C-values can be converted to the more familiar U-value form with little difficulty. A U-value based on measurement for the glazing system can be found by using

suitable indoor and outdoor side thermal conductances (h_i and h_o, respectively) to modify the measured C-value.

$$U = [\ C^{-1} + h_i^{-1} + h_o^{-1}\ ]^{-1} \qquad (6)$$

Since this experimental procedure does not involve the measurement of heat transfer between the glazing system and its environment, many of the problems involving the validity and experimental reproducibility of convective film coefficients are eliminated.

MEASUREMENT RESULTS

Heat transfer testing of six prototypical glazing systems was carried out (17) using the guarded heater plate apparatus. All of the glazing systems consisted of two 0.25 inch (6 mm) lites of conventional glass separated by air layers and up to two 0.001 inch (0.0254 mm) thick FEP films used as intermediate glazings. In each case, the outdoor (cold side) glazing had a copper or gold colored solar-control metal coating on the surface facing the other glazings. The individual panes of each glazing system were held at 0.470 inch (11.94 mm) spacings by spacers made of rigid insulating foam. A cross section of the edge of a double-glazed prototype is shown in Figure 6. Thermal resistance values reported here were measured at the heater plate located at the center of the warm copper plate where the heat transfer through the glazing system was assumed to be free of edge effects.

Each prototype was simulated using a modified version of the VISION glazing system thermal analysis program (18). This program modification involved substituting the thermal resistance of the neoprene sheet, R_n, for the thermal resistance that would normally be accounted for between the glazing system and its environment. This alteration allows the program to simulate the indoor and outdoor temperature nodes, T_1 and T_n, as the hot and cold copper plates, respectively. The results of the simulation included the total heat flux through the glazing system, q_{tot}, plus the temperatures of the glazings adjacent to the hot and cold copper plates, T_2 and T_{n-1}, respectively. The simulated glass-to-glass conductance, C_{VISION}, was then calculated according to Equation 7.

$$C_{VISION} = q_{tot}/(T_2 - T_{n-1}) \qquad (7)$$

The measured and simulated C-value results for the prototypical glazing systems are shown in Table 1. In addition, all of the glazing systems have been simulated using VISION (in its unmodified form) and the U-values for ASHRAE winter and summer design conditions, U_W and U_S, respectively, as well as the shading coefficient are reported in Table 1. The temperature levels, T_{hot} and T_{cold}, shown in Table 1 are the constant temperature bath settings.

The measured and calculated C-value results shown in Table 1 agree very well. The largest discrepancies noted were 8% and were recorded for both of the double-glazed systems tested at the higher temperature difference. In general, better agreement was found for glazing systems with more panes. In the cases where the measured C-value changed as a function of the applied temperature difference, a similar change in C-value was generally noted in the simulation results. More details regarding this study (e.g., measurement of the optical properties used for simulation, the simulation program, etc.) can be found in reference 17.

Seven heat transfer tests were completed using a different guarded heater plate apparatus that contains a single heater plate located at the center of the warm copper plate (19,20). The corresponding simulations were carried out using a computer program called NFILM (19,20). NFILM is a forerunner of the thermal analysis model that is used in VISION. The experiments were carried out by placing a sheet of Teflon (FEP) film (0.001 inch [0.0254 mm] thick) centrally in a horizontal air layer bounded by two polished copper plates. The air layer was heated from above. The test was repeated with one copper plate blackened and then with both plates blackened. In each case the hemispheric emissivities of the plates, ε_{hot} and ε_{cold}, were measured using an infrared reflectometer.

Comparison between theory and experiment was excellent, generally within 2%. The full set of results is reported in Table 2. It is expected that this high level of agreement was due not only to the use of measured data for the simulation (plate spacing, optical properties, etc.) but was also due to the carefully prescribed state of the air. In this case the measured

convective heat transfer was expected to be free of the effect of any turn around region at the edges of the plates and the convective/conductive heat transfer could be precisely quantified at each gap (i.e., Nu=1). More detailed information (e.g., measurement of the optical properties of FEP film) can be found in references 6 and 7.

DISCUSSION

Edge Effects

The glazing system experiments performed to date have relied upon the measurement of heat flux at the center heater plate. It was assumed that heat flux measured over this area was free of edge effects (such as the turn around of the convective flow or the seal at the edge of the glazing system) and that it was representative of the glazing system or "center glass" portion of the window. If it is necessary to research the two-dimensional nature of heat transfer across the face of a sealed glazing unit, then the heat transfer measurements that can be made with the end heater plates could be extremely useful. If the sealed unit is placed in the proper location, then it would be possible to experimentally quantify heat transfer at and near the edge seal. However, this approach would not come without its limitations. Because the glazing unit is separated from the copper plates by neoprene mats, the location at which the heat flux is measured (i.e., the surface of the heater plate) is removed from the surface of the glazing. If 2-D heat transfer near the edge of a glazing system is being measured, then interpretation of the measured heat flux could potentially be difficult. Furthermore, the relatively high thermal conductance of the mats does not approximate the indoor and outdoor conductances likely to be encountered in the environment, and the glazings adjacent to the copper plates will be driven more closely to being isothermal as a result. It is possible to tailor the thermal conductances of the mats (e.g., alternate materials or thicknesses) to obtain more realistic conditions, but questions regarding the interpretation of the measured heat flux would remain.

An alternate, and likely more fruitful, approach to the 2-D analysis is to couple the measuring technique with a numerical model of the sealed glazing system unit. In this manner, the experimental testing could be carried out in the customary fashion using neoprene mats and the results compared with the results of the numerical simulation. This would be a valid and direct comparision, because the surface conductances at the glazing system boundaries could be adjusted in the simulation model to exactly match those that were used for experimentation. Following validation, the numerical model could be used to explore the details of various glazing and seal combinations while incorporating more realistic surface thermal conductances.

CONCLUSIONS

An accurate method of determining the "center glass" glazing system U-value has been described. Measured and calculated heat transfer rates have been presented and compared. Agreement between calculated and measured results was within 3% in most cases and within 8% in all cases.

The simplicity of the apparatus permits measurements to be carried out quickly and at low cost, making this test method useful as a developmental test procedure for glazing system design.

This measurement process involves a glass-to-glass heat transfer measurement and eliminates the problems involved in providing reproducible convective film coefficients as required by most other test methods for glazing system U-value measurement.

The apparatus permits testing glazing systems at any tilt angle, a feature not common to U-value test rigs.

REFERENCES

1. Hollands, K.G.T., "Natural Convection in a Horizontal Thin-Walled Honeycomb Panels," Journal of Heat Transfer, Vol. 95, pp. 439-444, Nov. 1973.

2. Hollands, K.G.T. and Konicek, L., "Experimental Study of the Stability of Differentially Heated Inclined Air Layers," International Journal of Heat and Mass Transfer, Vol. 16, pp. 1467-1476, 1973.

3. Hollands, K.G.T., Raithby, G.D. and Konicek, L., "Correlation Equations for Free Convection Heat Transfer in Horizontal Layers of Air and Water," International Journal of Heat and Mass Transfer, Vol. 18, pp.879-884, 1975.

4. Hollands, K.G.T., Unny, T.E., Raithby, G.D. and Konicek, L., "Free Convective Heat Transfer Across Inclined Air Layers," Journal of Heat Transfer, Vol. 98, No. 2, 1976.

5. ElSherbiny, S.M., Hollands, K.G.T. and Raithby, G.D., "Nusselt Number Distribution in Vertical and Inclined Air Layers," Transactions of the ASME, Vol. 105, 1983.

6. ElSherbiny, S.M., Hollands, K.G.T. and Raithby, G.D., "Effect of Thermal Boundary Conditions on Natural Convection in Vertical and Inclined Air Layers," Journal of Heat Transfer, Vol. 104, 1982.

7. Ruth, D.W., Hollands, K.G.T. and Raithby, G.D., "On Free Convection Experiments in Inclined Air Layers Heated from Below," Journal of Fluid Mechanics, Vol. 96, pp.459-479, 1980.

8. ElSherbiny, S.M., Raithby, G.D. and Hollands, K.G.T., "Heat Transfer by Natural Convection Across Vertical and Inclined Air Layers", Journal of Heat Transfer, Vol. 104, Feb. 1982.

9. ElSherbiny, S.M., Hollands, K.G.T. and Raithby, G.D., "Free Convection Across Inclined Air Layers with One Surface V-Corrugated ," Transactions of the ASME, Vol. 100, 1978.

10. Wright, J.L. and Hollands, K.G.T., "Radiant and Free Convective Heat Transfer Through a Pleated (V-Corrugated) Teflon Film," Proceedings of the International Solar Energy Society Conference, Hamburg, 1987.

11. Hollands, K.G.T., Raithby, G.D., Russel, F.B. and Wilkinson, R.G., "Coupled Radiative and Conductive Heat Transfer Across Honeycomb Panels and Through Single Cells," International Journal of Heat and Mass Transfer, Vol. 27, No. 11, pp. 2119-2131, 1984.

12. Cane, R.L.D., Hollands, K.G.T., Raithby, G.D. and Unny, T.E., "Free Convection Heat Transfer Across Inclined Honeycomb Panels," Journal of Heat Transfer, Vol. 99, no. 1, pp.86-91, 1977.

13. Ford, C.J., "Convection Suppression in Flat Plate Solar Collectors by the Use of Square Celled Honeycombs," M.A.Sc. thesis, University of Waterloo, Waterloo, Canada, 1987.

14. Smart, D.R., Hollands, K.G.T. and Raithby, G.D., "Free Convection Heat Transfer Across Rectangular-Celled Diathermanous Honecombs," Journal of Heat Transfer, Vol. 102, 1980.

15. Hollands, K.G.T. and Iynkaran, K., "Proposal for a Compound-Honeycomb Collector," Solar Energy, Vol. 34, No. 4/5, pp. 309-316, 1985.

16. Bolz, R.E. and Tuve, G.L., "C.R.C. Handbook of Tables for Applied Engineering Science," 2nd Ed. C.R.C. Press, pp. 157.

17. Wright, J.L. and Sullivan, H.F., "Simulation and Measurement of Windows with Metal Films Used in Conjunction with Teflon Inner Glazings," International Conference on Building Energy Management, Lausanne, Switzerland, September, 1987.

18. Wright, J.L. and Sullivan, H.F., "VISION: A Computer Program for the Detailed Simulation of the Thermal Performance of Innovative Glazing Systems," International Conference on Building Energy Management, Lausanne, Switzerland, September, 1987.

19. Hollands, K.G.T. and Wright, J.L., "Heat Loss Coefficients and Effective τα Products for Flat-Plate Collectors with Diathermanous Covers," Solar Energy 30(3), pp.211-216, 1982.

20. Hollands, K.G.T. and Wright, J.L., "Theory and Experiment on Heat Loss Coefficients for Plastic Covers," Proceedings of the American Section of the International Solar Energy Society, pp. 441-445, 1980.

ACKNOWLEDGMENTS

Research on glazing systems at the University of Waterloo is funded largely by the Renewable Energy Division, Solar Energy Development Program, Department of Energy, Mines and Resources Canada. The authors also wish to acknowledge discussions with Prof. K.G.T. Hollands and his cooperation regarding the use of the guarded heater plate apparatus.

TABLE 1 (I-P)
Comparison of Simulated and Measured C-Values

	Metal Coating	T_{cold} (F)	# FEP Films	C_{meas} (Btu/hr ft^2 F)	C_{VISION} (Btu/hr ft^2 F)	U_w (Btu/hr ft^2 F)	U_s (Btu/hr ft^2 F)	SC
1	gold	14.0	0	0.48	0.52	0.34	0.51	0.10
2	gold	14.0	1	0.34	0.33	0.25	0.29	0.09
3	gold	14.0	2	0.29	0.29	0.22	0.26	0.08
4	copper	14.0	0	0.41	0.44	0.31	0.32	0.16
5	copper	14.0	1	0.29	0.27	0.22	0.24	0.15
6	copper	14.0	2	0.24	0.24	0.19	0.22	0.15
7	gold	32.0	2	0.29	0.29	0.22	0.26	0.08
8	copper	32.0	0	0.41	0.41	0.31	0.32	0.16
9	copper	32.0	1	0.29	0.27	0.22	0.24	0.15
10	copper	32.0	2	0.25	0.24	0.19	0.22	0.15

Pane spacing = 0.470 in, T_{hot} = 69.8 F, slope = vertical, fill gas = air

TABLE 2 (I-P)
NFILM Prediction versus Experimental Results

T_{hot} (F)	T_{cold} (F)	Plate Spacing (in)	ε_{hot}	ε_{cold}	h_{meas} (Btu/hr ft^2 F)	h_{NFILM} (Btu/hr ft^2 F)
95.4	78.9	0.755	0.065	0.065	0.28	0.28
86.1	65.9	0.760	0.065	0.889	0.37	0.36
89.1	66.1	0.760	0.065	0.889	0.36	0.36
95.4	64.8	0.760	0.065	0.889	0.37	0.37
99.9	68.1	0.760	0.889	0.889	0.95	0.94
88.6	67.0	0.760	0.889	0.889	0.92	0.91
81.4	66.8	0.760	0.889	0.889	0.91	0.90

TABLE 1 (SI)
Comparison of Simulated and Measured C-Values

	Metal Coating	T_{cold} (C)	# FEP Films	C_{meas} (W/m^2C)	C_{VISION} (W/m^2C)	U_w (W/m^2C)	U_s (W/m^2C)	SC
1	gold	-10.0	0	2.72	2.94	1.95	2.91	0.10
2	gold	-10.0	1	1.95	1.89	1.41	1.65	0.09
3	gold	-10.0	2	1.63	1.62	1.24	1.50	0.08
4	copper	-10.0	0	2.32	2.51	1.78	1.80	0.16
5	copper	-10.0	1	1.64	1.56	1.23	1.37	0.15
6	copper	-10.0	2	1.38	1.35	1.08	1.25	0.15
7	gold	0.0	2	1.67	1.66	1.24	1.50	0.08
8	copper	0.0	0	2.31	2.35	1.78	1.80	0.16
9	copper	0.0	1	1.65	1.56	1.23	1.37	0.15
10	copper	0.0	2	1.40	1.37	1.08	1.25	0.15

Pane spacing = 11.94 mm, T_{hot} = 21.0 C, slope = vertical, fill gas = air

TABLE 2 (SI)
NFILM Prediction versus Experimental Results

T_{hot} (K)	T_{cold} (K)	Plate Spacing (mm)	ε_{hot}	ε_{cold}	h_{meas} (W/m^2K)	h_{NFILM} (W/m^2K)
308.4	299.2	19.18	0.065	0.065	1.61	1.59
303.2	292.0	19.30	0.065	0.889	2.08	2.06
304.9	292.1	19.30	0.065	0.889	2.05	2.07
308.4	291.4	19.30	0.065	0.889	2.08	2.08
310.9	293.2	19.30	0.889	0.889	5.38	5.34
304.6	292.6	19.30	0.889	0.889	5.23	5.19
300.6	292.5	19.30	0.889	0.889	5.18	5.10

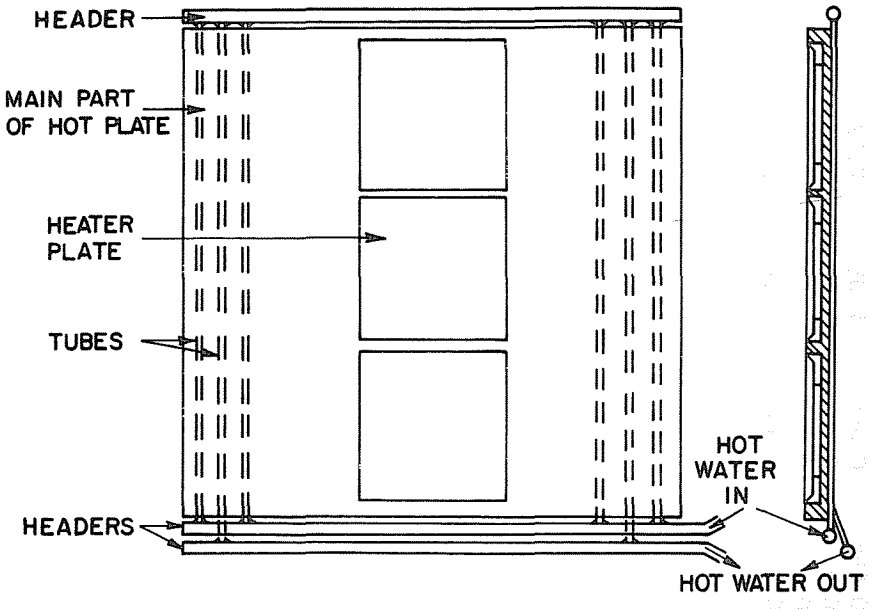

Figure 1 Sketch of the hot plate

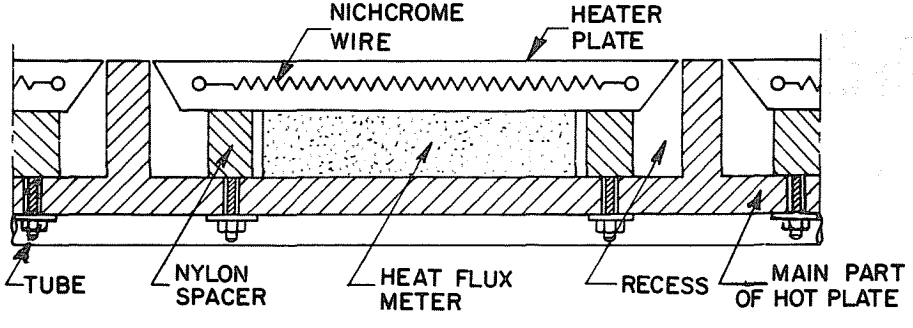

Figure 2 Heater plate/heat flux meter detail

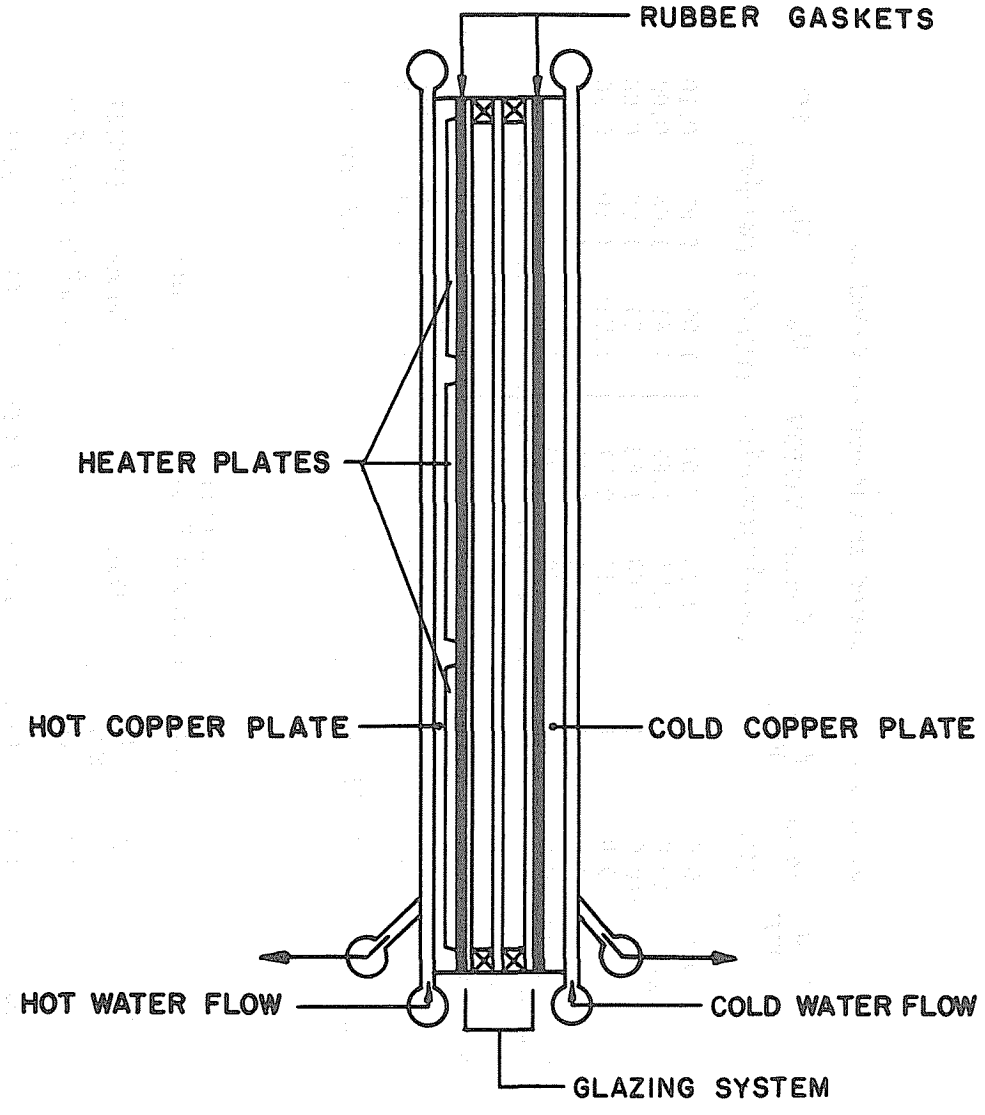

Figure 3 Copper plates with triple glazed test unit

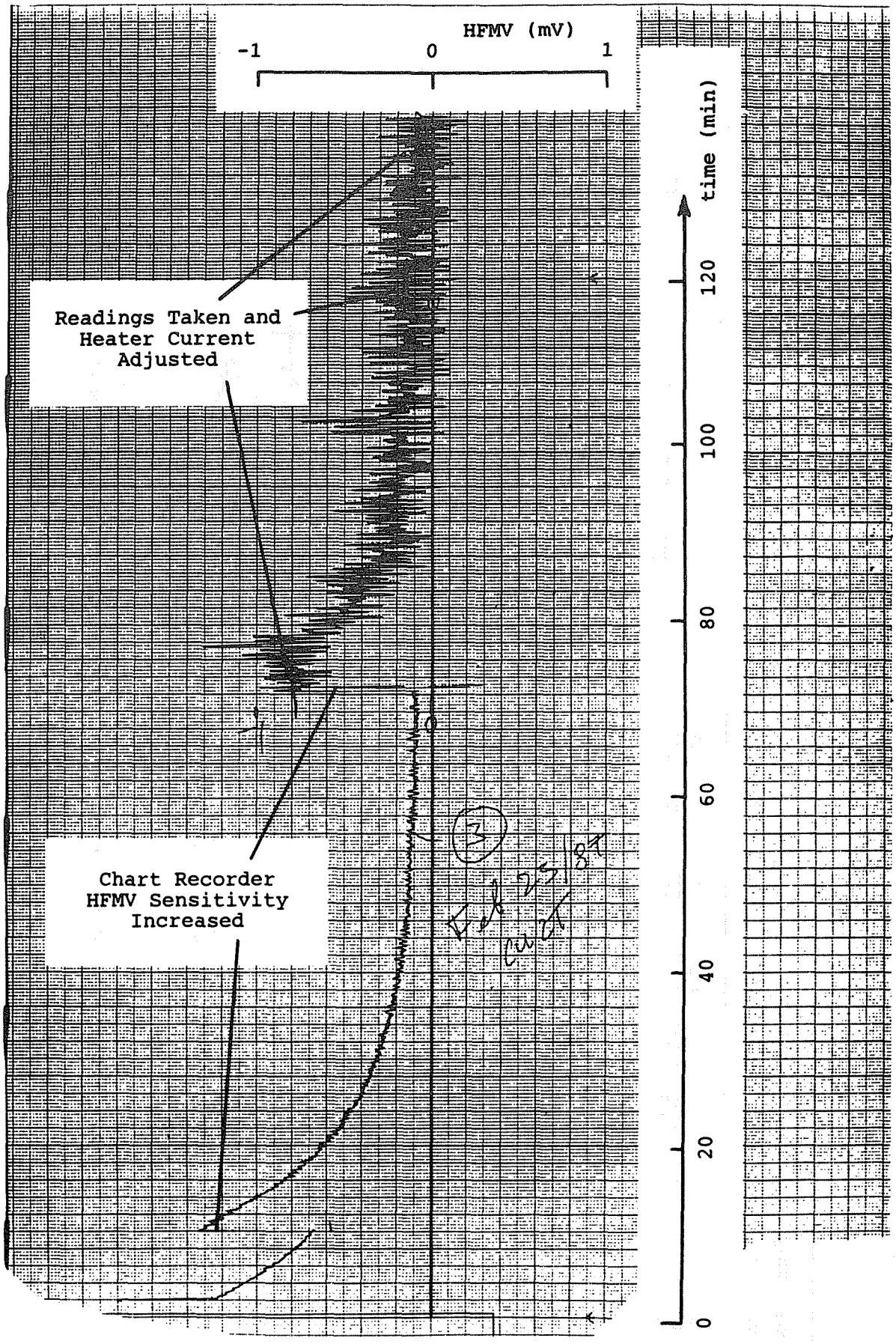

Figure 4 Sample HFMV strip chart recorder output

$HFMV_1$ (mV)	$HFMV_2$ (mV)	$HFMV_3$ (mV)	$V_{h,1}$ (V)	$V_{h,2}$ (V)	$V_{h,3}$ (V)	$I_{h,2}$ (A)	EMF (mV)	$Q_{e,2}$ (W)
0.46	0.16	-0.78	3.946	4.047	4.147	0.3873	7.180	1.567
0.20	0.10	-0.15	3.901	4.029	4.231	0.3856	7.182	1.554
0.00	0.00	-0.04	3.850	4.001	4.239	0.3829	7.180	1.532

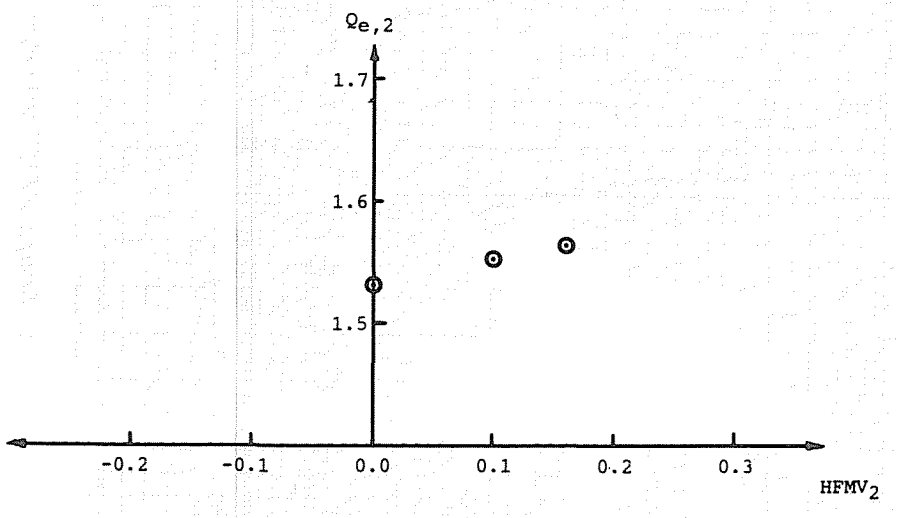

Figure 5 Sample test results and Q_e vs HFMV plot

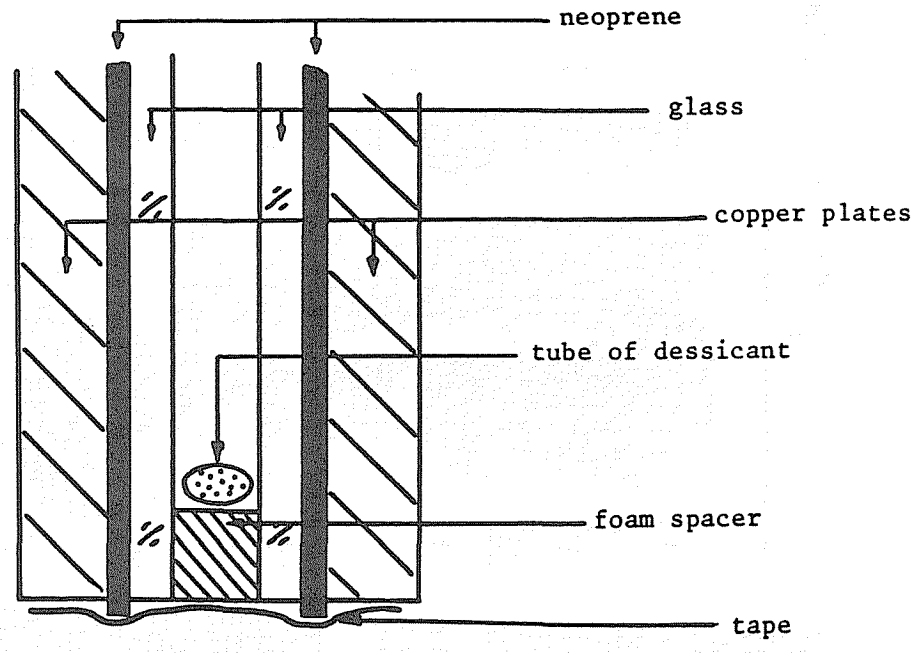

Figure 6 Cross section at edge of double glazed test unit

DISCUSSION

H.A. Trethowen, Building Research Association of New Zealand, Wellington: Is the wiring of the thermopile in your heat flux transducer wound in a uni-directional spiral? (If so, that form of wiring is sensitive not only to normal heat flow but also very sensitive to edge-to-edge temperature difference.) Note: this issue is discussed briefly in "Measurement Errors with Surface Mounted Heat Flux Sensors," Building and Environment, Vol. 21, No. 1, 1986, pp. 41-46.

J.L. Wright: Since the heat flux transducers are round, I suspect that they are spiral wound, but I do not know about the details of their construction. Each transducer is held between two copper plates. It is felt that this arrangement precludes the possibility of edge-to-edge temperature gradients. Furthermore, the heat flux transducer is not used to measure heat flux flowing solely through the meter itself but is used to measure the total heat transfer (by all modes and by any path) between the guarded heater plate and the large copper plate in which it is embedded. The measurement procedure is such that the transducer is used to detect a null condition, and no calibration data for the heat flux are needed.